SSP-PRC020-EN

Split System Heat Pump Product & Performance Data

XB 13

4TWB3018-060

1½ – 5 Tons

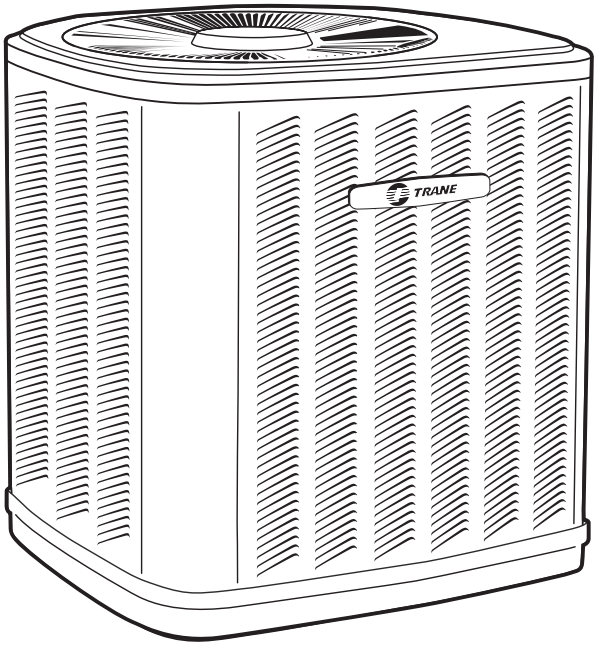

PUB. NO. 22-1793-01-1006 (EN)

Features and Benefits

- **Climatuff®** compressor
- All aluminum **Spine Fin™** coil
- **Quick-Sess™** cabinet, service access and refrigerant connections with full coil protection
- **DuraTuff™** base, fast complete drain, weather proof
- Glossy corrosion resistant finish
- Internal compressor high/low pressure and temperature protection
- 018, 024, 030 and 060 ship with Start Kit
- Liquid line filter-drier
- Polyslate gray cabinet
- Low Pressure Switch
- Demand Defrost Control
- High Pressure Switch
- R-410A refrigerant
- **5 year limited warranty on compressor, coil and 5 years on parts (Residential Use)**
- **Extended warranties available**
- 100% line run test
- Low ambient cooling to 55°F as shipped
- Low ambient cooling to 30°F with EDC accessory AY28X084 and TXV

© 2006 American Standard Inc. All Rights Reserved

Contents

Features and Benefits	**2**
General Data	**4**
Product Specifications	4
A-weighted Sound Power Level [dB(A)]	4
Accessory Description and Usage	5
ARI Standard Capacity Rating Conditions	5
Model Nomenclature	**6**
Performance Data Cooling	**7**
4TWB3018A1	7
4TWB3024A1	8
4TWB3030A1	10
4TWB3036A1	13
4TWB3042A1	19
4TWB3048A1	22
4TWB3060A1	26
Performance Data Heating	**27**
4TWB3018A1	27
4TWB3024A1	28
4TWB3030A1	30
4TWB3036A1	33
4TWB3042A1	39
4TWB3048A1	42
4TWB3060A1	46
Electrical Data	**47**
Dimensions	**50**
Mechanical Specification Options	**51**

General Data

Product Specifications

Model No. ①	4TWB3018A1	4TWB3024A1	4TWB3030A1	4TWB3036A1
Electrical Data V/Ph/Hz ②	200/230/1/60	200/230/1/60	200/230/1/60	208/230/1/60
Min Cir Ampacity	10	12	15	21
Max Fuse Size (Amps)	15	20	25	35
Compressor	CLIMATUFF®	CLIMATUFF®	CLIMATUFF®	CLIMATUFF® - SCROLL
RL Amps - LR Amps	7.7 - 38.6	9.4 - 63	11.7 - 68.2	15.4 - 83
Outdoor Fan FL Amps	0.7	0.7	0.7	1.3
Fan HP	1/8	1/8	1/8	1/4
Fan Dia (inches)	23.0	23.0	23.0	27.6
Coil	Spine Fin™	Spine Fin™	Spine Fin™	Spine Fin™
Refrigerant R-410A	5/12-LB/OZ	5/12-LB/OZ	6/01-LB/OZ	7/15-LB/OZ
Line Size - (in.) O.D. Gas ③	1/2	5/8	3/4	3/4
Line Size - (in.) O.D. Liquid ③	1/4	5/16	5/16	3/8
Charge Spec. Subcooling	10°	11°	11°	10°
Dimensions H x W x D (Crated)	34 x 30.1 x 33	34 x 30.1 x 33	42 x 30.1 x 33	42.4 x 35.1 x 38.7
Weight - Shipping	221	224	237	277
Weight - Net	193	196	209	242
Start Components	YES	YES	YES	NO
Sound Enclosure	NO	NO	NO	NO
Compressor Sump Heat	NO	YES	YES	YES
Optional Accessories: ④				
Anti-short Cycle Timer	TAYASCT501A	TAYASCT501A	TAYASCT501A	TAYASCT501A
Evaporator Defrost Control	AY28X084	AY28X084	AY28X084	AY28X084
Rubber Isolator Kit	BAYISLT101	BAYISLT101	BAYISLT101	BAYISLT101
Snow Leg-Base & Cap 4" High	BAYLEGS002	BAYLEGS002	BAYLEGS002	BAYLEGS002
Snow Leg-4" Extension	BAYLEGS003	BAYLEGS003	BAYLEGS003	BAYLEGS003
Extreme Condition Mounting Kit	BAYECMT001	BAYECMT001	BAYECMT001	BAYECMT001
Start Kit				BAYKSKT260
Crankcase Heater Kit	BAYCCHT300			
Seacoast Kit	BAYSEAC001	BAYSEAC001	BAYSEAC001	BAYSEAC001
Low Ambient Kit	BAYLOAM103	BAYLOAM103	BAYLOAM103	BAYLOAM103
Refrigerant Lineset ⑤	TAYREFLN5*	TAYREFLN6*	TAYREFLN2*	TAYREFLN7*

① Certified in accordance with the Air-Source Unitary Heat Pump equipment certification program which is based on ARI Standard 210/240.
② Calculated in accordance with N.E.C. Only use HACR circuit breakers or fuses.
③ Standard line lengths - 60'. Standard lift - 60' Suction and Liquid line.
For Greater lengths and lifts refer to refrigerant piping software Pub# 32-3312-0†. (†denotes latest revision)
④ For accessory description and usage, see page 5.
⑤ * = 15, 20, 25, 30, 40 and 50 foot lineset available.

A-weighted Sound Power Level [dB(A)]

MODEL	SOUND POWER LEVEL [dB(A)]	A-WEIGHTED FULL OCTAVE SOUND POWER LEVEL dB - [dB(A)]							
		63	125	250	500	1000	2000	4000	8000
4TWB3018A1	79	47.3	60.7	65.8	71.2	72.8	72.1	62.2	52.8
4TWB3024A1	81	45.3	58.8	70.5	70.5	75.4	75.3	66.8	61.3
4TWB3030A1	80	46.6	58.2	65.9	69.2	73.5	73.1	62.3	56.5
4TWB3036A1	79	46.4	59.6	67.4	74.8	73.8	68.9	61.2	53.4
4TWB3042A1	80	47.6	58.3	67.3	74.9	74.9	70.4	62.3	53.0
4TWB3048A1	78	47.0	56.5	66.7	73.0	72.8	69.3	62.0	51.4
4TWB3060A1	78	45.3	55.1	66.6	73.0	73.5	69.7	63.1	53.9

Note: Tested in accordance with ARI Standard 270.95. (Not listed with ARI)

General Data

Product Specifications

Model No. ①	4TWB3042A1	4TWB3048A1	4TWB3060A1
Electrical Data V/Ph/Hz ②	208/230/1/60	208/230/1/60	208/230/1/60
Min Cir Ampacity	25	30	36
Max Fuse Size (Amps)	40	50	60
Compressor	CLIMATUFF® - SCROLL	CLIMATUFF® - SCROLL	CLIMATUFF® - SCROLL
RL Amps - LR Amps	18.6 - 105	23.1 - 134	27.6 - 158
Outdoor Fan FL Amps	1.3	1.3	1.3
Fan HP	1/4	1/4	1/4
Fan Dia (inches)	27.6	27.6	27.6
Coil	Spine Fin™	Spine Fin™	Spine Fin™
Refrigerant R-410A	8/03-LB/OZ	8/10-LB/OZ	9/07-LB/OZ
Line Size - (in.) O.D. Gas ③	3/4	7/8	7/8
Line Size - (in.) O.D. Liquid ③	3/8	3/8	3/8
Charge Spec. Subcooling	10°	10°	13°
Dimensions H x W x D (Crated)	42.4 x 35.1 x 38.7	46.4 x 35.1 x 38.7	46.4 x 35.1 x 38.7
Weight - Shipping	278	291	314
Weight - Net	243	255	278
Start Components	NO	NO	YES
Sound Enclosure	NO	NO	NO
Compressor Sump Heat	YES	YES	YES
Optional Accessories: ④			
Anti-short Cycle Timer	TAYASCT501A	TAYASCT501A	TAYASCT501A
Evaporator Defrost Control	AY28X084	AY28X084	AY28X084
Rubber Isolator Kit	BAYISLT101	BAYISLT101	BAYISLT101
Snow Leg-Base & Cap 4" High	BAYLEGS002	BAYLEGS002	BAYLEGS002
Snow Leg-4" Extension	BAYLEGS003	BAYLEGS003	BAYLEGS003
Extreme Condition Mounting Kit	BAYECMT001	BAYECMT001	BAYECMT001
Start Kit	BAYKSKT260	BAYKSKT260	
Crankcase Heater Kit			
Seacoast Kit	BAYSEAC001	BAYSEAC001	BAYSEAC001
Low Ambient Kit	BAYLOAM103	BAYLOAM103	BAYLOAM103
Refrigerant Lineset ⑤	TAYREFLN7*	TAYREFLN3*	TAYREFLN3*

Accessory Description and Usage

Anti-Short Cycle Timer — Solid state timing device that prevents compressor recycling until five (5) minutes have elapsed after satisfying call or power interruptions. Use in area with questionable power delivery, commercial applications, long lineset, etc.

Evaporator Defrost Control — SPST Temperature actuated switch that cycles the condenser off as indoor coil reaches freeze-up conditions. Used for low ambient cooling to 30°F with TXV.

Rubber Isolators — Five (5) large rubber donuts to isolate condensing unit from transmitting energy into mounting frame or pad. Use on any application where sound transmission needs to be minimized.

Hard Start kit — Start capacitor and relay to assist compressor motor startup. Use in areas with marginal power supply, on long linesets, low ambient conditions, etc.

Extreme Condition Mount Kit — Bracket kits to securely mount condensing unit to a frame or pad without removing any panels. Use in areas with high winds, or on commercial roof tops, etc.

ARI Standard Capacity Rating Conditions

ARI STANDARD 210/240 RATING CONDITIONS —

(A) Cooling 80°F DB, 67°F WB air entering indoor coil, 95°F DB air entering outdoor coil.

(B) High Temperature Heating 47°F DB, 43°F WB air entering outdoor coil, 70°F DB air entering indoor coil.

(C) Low Temperature Heating 17°F DB, 15°F WB air entering outdoor coil, 70°F DB air entering indoor coil.

(D) Rated indoor airflow for heating is the same as for cooling.

ARI STANDARD 270 RATING CONDITIONS — (Noise rating numbers are determined with the unit in cooling operation.) Standard Noise Rating number is at 95°F outdoor air.

ARI PERFORMANCE CERTIFIED™

ARI Standard 210/240 UHP

c UL® US

Model Nomenclature

Outdoor Units

4 T W B 3 0 3 6 A 1 0 0 0 A A

Refrigerant Type
2 = R-22
4 = R-410A

TRANE

Product Type
W = Split Heat Pump
T = Split Cooling

Product Family
Z = Leadership – Two Stage
X = Leadership
R = Replacement/Retail
B = Basic
A = Light Commercial

Family SEER
0 = 10 3 = 13 6 = 16
1 = 11 4 = 14 8 = 18
2 = 12 5 = 15 9 = 19

Split System Connections 1-6 Tons
0 = Brazed

Nominal Capacity in 000s of BTUs

Major Design Modifications

Power Supply
1 = 200-230/1/60 or 208-230/1/60
3 = 200-230/3/60
4 = 460/3/60

Secondary Function

Minor Design Modifications

Unit Parts Identifier

High Efficiency Furnaces

T U D 1 B 0 8 0 A 9 H 3 1 A A

Furnace Configuration
TU = Upflow / Horizontal
TD = Downflow / Horizontal

Type
D = 80% Premium
X = 90% Premium

Number of Heating Stages
1 = Single Stage
2 = Two Stage
3 = Three Stage

Cabinet Width
A = 14.5" Cabinet Width
B = 17.5" Cabinet Width
C = 21.0" Cabinet Width
D = 24.5" Cabinet Width

Heating Input
080 = 80,000 BTUH

Major Design Change

Power Supply / Fuel
9 = 115 Volts / Natural Gas
F = 115 Volts / Natural Gas with Integrated ifD Filter

Airflow Capacity for Cooling
36 = 3 Ton Standard PSC Motor
H3 = 3 Ton High Efficiency Motor
V3 = 3 Ton Variable Speed Motor

Draft Inducer Speeds
1 = Single Speed
2 = Two Speed
V = Variable Speed

Minor Design Change

Service Digit – Not Orderable

Air Handlers – Residential

4 T E E 3 F 3 6 A 1 0 0 0 A A

Refrigerant Type
4 = R-410A
2 = R-22

Application
TE = Fully Convertible
TG = Semi Convertible
TF = Front Return
TV = Vertical

Product Family
E = Leadership – Variable Speed
P = Leadership
C = Replacement/Retail
B = Basic

Flow Control
3 = Nonbleed TXV
4 = FCCV*

Feature Identifier
0 = Standard Unit
F = Air-Tite™

Nominal Capacity in 000s of BTUs

Major Design Modifications

Power Supply
1 = Single Phase

Electrical Connection
0 = Pig Tails
B = Circuit Breaker
D = Pull Disconnect

Future Option – Factory Installed Heater Nominal KW Value

Minor Design Modifications

Unit Parts Identifier

NOTE: There will be a phase-in of new model numbers for new air handlers over next 2 years.
*Shipped with R-22 FCCV

Heat Pump / Cooling Coils

2 T X C B 0 3 6 A C 3 H C A A

Refrigerant Type
2 = R-22 4 = R-410A

Product Family
T = Premium (Heat Pump or Convertible Coil)
C = Standard (Cooling Only)

Coil Design
X = Direct Expansion Evaporator Coil

Product Family
C = Cased A Coil
A = Uncased A Coil
F = Cased Horizontal Flat Coil

Coil Width (Cased / Uncased)
A = 14.5" / 13.3" C = 21.0" / 19.8" H = 10.5"
B = 17.5" / 16.3" D = 24.5" / 23.3"

Refrigerant Line Coupling
0 = Brazed

Nominal Capacity in 000s of BTUs

Major Design Change

Efficiency
C = Standard S = Hi Efficiency

Refrigerant Control
3 = TXV – Non-Bleed

Coil Circuitry
H = Heat Pump
C = Cooling Only

Airflow Configuration
A = Upflow Only
U = Upflow / Downflow
H = Horizontal Only
C = Convertible – Upflow, Downflow, Left Airflow
M = Convertible – Upflow, Downflow, Left or Right Airflow

Minor Design Change

Unit Parts Identifier

Performance Data
Cooling

4TWB3018A1

4TWB3018A1 WITH 4TEC3F18A1 AT 600 CFM

O.D. D.B.	I.D. W.B.	TOT. CAP.	SENS. CAP. AT ENTERING D.B. TEMP. 72	75	78	80	TOTAL KW
85	59	18.1	14.3	16.0	17.1	16.9	1.55
	63	18.8	11.7	13.4	15.1	16.2	1.56
	67	20.3	9.3	11.0	12.7	13.8	1.59
	71	21.9	6.9	8.6	10.3	11.5	1.60
95	59	16.6	13.6	15.3	16.6	16.6	1.68
	63	17.3	11.0	12.7	14.5	15.6	1.69
	67	18.6	8.6	10.4	12.1	13.2	1.71
	71	20.1	6.2	8.0	9.7	10.8	1.73
105	59	15.8	13.3	15.0	15.8	15.8	1.74
	63	16.5	10.7	12.4	14.1	15.3	1.75
	67	17.8	8.3	10.0	11.8	12.9	1.78
	71	19.2	5.9	7.6	9.4	10.5	1.79
115	59	13.6	12.3	13.6	13.6	13.6	1.92
	63	14.2	9.8	11.5	13.2	14.2	1.94
	67	15.3	7.4	9.1	10.8	12.0	1.97
	71	16.5	5.0	6.7	8.4	9.6	1.99

CORRECTION FACTORS FOR OTHER AIRFLOWS (MULTIPLY DATA BY FACTOR)

	AIRFLOW	TOTAL CAPACITY	SENSIBLE CAPACITY
LOW	525	0.98	0.98
HIGH	675	1.02	1.02

NOTE: ALL TABLES ABOVE ARE AT ARI RATING CONDITIONS RATED WITH 25 FEET OF REFRIGERANT LINES.
* DRY COIL CONDITION (TOTAL CAPACITY = SENSIBLE CAPACITY)
TOTAL CAPACITY, COMP. KW AND APP. DEW PT. ARE VALID ONLY FOR WET COIL. ALL TEMPERATURES IN DEGREES F.

CORRECTION FACTORS FOR OTHER COMBINATIONS (MULTIPLY DATA BY FACTOR)

INDOOR MODEL		CFM	MBTUH TOT	MBTUH SEN	SYST KW
2TEH3F18A1+4AYTXVH-3	NOMINAL	600	1.05	1.08	1.01
	LOW	525	1.03	1.05	1.00
	HIGH	675	1.08	1.11	1.02
2TEH3F24A1+4AYTXVH-3	NOMINAL	600	1.01	1.04	0.98
	LOW	525	0.99	1.01	0.97
	HIGH	675	1.04	1.07	0.99

CORRECTION FACTORS FOR OTHER COMBINATIONS (MULTIPLY DATA BY FACTOR)

INDOOR MODEL		CFM	MBTUH TOT	MBTUH SEN	SYST KW
4TEE3F31A1	NOMINAL	600	1.03	1.06	0.99
	LOW	525	1.01	1.03	0.98
	HIGH	675	1.05	1.09	1.00
4TXCA018AC3+TDD060R9V3	NOMINAL	600	0.97	0.99	0.92
	LOW	525	0.95	0.96	0.92
	HIGH	675	0.98	1.02	0.93
4TXCA018AC3+TDD080R9V3	NOMINAL	600	0.97	1.01	0.94
	LOW	525	0.95	0.98	0.93
	HIGH	675	0.98	1.04	0.95
4TXCA018AC3+TDY060R9V3	NOMINAL	600	0.97	0.99	0.92
	LOW	525	0.95	0.96	0.91
	HIGH	675	0.98	1.02	0.93
4TXCA018AC3+TUD060R9V3	NOMINAL	600	0.96	0.99	0.92
	LOW	525	0.94	0.96	0.92
	HIGH	675	0.98	1.02	0.93
4TXCA018AC3+TUD100R9V3	NOMINAL	600	0.97	0.99	0.92
	LOW	525	0.95	0.96	0.91
	HIGH	675	0.98	1.02	0.93
4TXCA018AC3+TUY060R9V3	NOMINAL	600	0.96	0.99	0.92
	LOW	525	0.94	0.96	0.92
	HIGH	675	0.98	1.02	0.93
4TXFH018AS3+TDD060R9V3	NOMINAL	600	0.95	0.98	0.91
	LOW	525	0.93	0.95	0.90
	HIGH	675	0.97	1.01	0.91
4TXFH018AS3+TDD080R9V3	NOMINAL	600	0.95	0.99	0.92
	LOW	525	0.93	0.96	0.92
	HIGH	675	0.97	1.02	0.93
4TXFH018AS3+TDY060R9V3	NOMINAL	600	0.95	0.98	0.91
	LOW	525	0.93	0.95	0.90
	HIGH	675	0.97	1.01	0.91
TXH025A4+4AYTXVH-3+TDD060R9V3	NOMINAL	600	0.95	0.98	0.91
	LOW	525	0.93	0.95	0.90
	HIGH	675	0.97	1.01	0.91
TXH025A4+4AYTXVH-3+TDY060R9V3	NOMINAL	600	0.95	0.98	0.91
	LOW	525	0.93	0.95	0.90
	HIGH	675	0.97	1.01	0.91

Performance Data
Cooling

4TWB3024A1

4TWB3024A1 WITH 4TEC3F24A1 AT 800 CFM

O.D. D.B.	I.D. W.B.	TOT. CAP.	SENS. CAP. AT ENTERING D.B. TEMP. 72	75	78	80	TOTAL KW
85	59	23.1	18.2	20.4	22.2	21.8	1.93
	63	24.1	14.9	17.0	19.2	20.6	1.95
	67	26.0	11.9	14.0	16.2	17.6	1.98
	71	28.1	8.8	11.0	13.2	14.6	2.00
95	59	20.6	17.1	19.2	20.6	20.6	2.07
	63	21.5	13.8	16.0	18.1	19.6	2.08
	67	23.2	10.8	13.0	15.1	16.6	2.12
	71	25.0	7.8	10.0	12.1	13.6	2.14
105	59	19.3	16.5	18.7	19.3	19.3	2.14
	63	20.2	13.3	15.4	17.6	19.0	2.15
	67	21.7	10.3	12.4	14.6	16.0	2.19
	71	23.5	7.3	9.4	11.6	13.0	2.21
115	59	15.6	14.9	15.6	15.6	15.6	2.35
	63	16.2	11.7	13.9	16.1	16.2	2.36
	67	17.5	8.7	10.9	13.1	14.5	2.40
	71	18.9	5.8	7.9	10.1	11.5	2.42

CORRECTION FACTORS FOR OTHER AIRFLOWS (MULTIPLY DATA BY FACTOR)

	AIRFLOW	TOTAL CAPACITY	SENSIBLE CAPACITY
LOW	700	0.98	0.98
HIGH	900	1.02	1.02

NOTE: ALL TABLES ABOVE ARE AT ARI RATING CONDITIONS RATED WITH 25 FEET OF REFRIGERANT LINES.
* DRY COIL CONDITION (TOTAL CAPACITY = SENSIBLE CAPACITY)
TOTAL CAPACITY, COMP. KW AND APP. DEW PT. ARE VALID ONLY FOR WET COIL. ALL TEMPERATURES IN DEGREES F.

CORRECTION FACTORS FOR OTHER COMBINATIONS (MULTIPLY DATA BY FACTOR)

INDOOR MODEL		CFM	MBTUH TOT	MBTUH SEN	SYST KW
2TEH3F24A1+4AYTXVH-3	NOMINAL	800	1.04	1.07	1.04
	LOW	700	1.02	1.04	1.03
	HIGH	900	1.06	1.11	1.05
2TEH3F30A1+4AYTXVH-3	NOMINAL	800	1.02	1.06	1.03
	LOW	700	1.00	1.03	1.02
	HIGH	900	1.04	1.09	1.04
2TFB3F30B1+4AYTXVH-3	NOMINAL	800	0.99	1.01	1.01
	LOW	700	0.97	0.98	1.00
	HIGH	900	1.01	1.04	1.02
2TGB3F25A1+4AYTXVH-3	NOMINAL	800	0.98	0.97	0.98
	LOW	700	0.96	0.94	0.98
	HIGH	900	1.00	0.99	0.99
4TEE3F31A1	NOMINAL	800	1.00	1.04	1.01
	LOW	700	0.98	1.01	1.00
	HIGH	900	1.02	1.07	1.02
4TEP3F24A1	NOMINAL	800	0.99	1.02	1.01
	LOW	700	0.97	0.99	1.00
	HIGH	900	1.01	1.05	1.02
4TFE3F25B1	NOMINAL	800	1.04	1.07	1.02
	LOW	700	1.02	1.04	1.01
	HIGH	900	1.06	1.11	1.03
4TXCA024AC3+TDD060R9V3	NOMINAL	800	0.97	1.01	0.95
	LOW	700	0.95	0.98	0.94
	HIGH	900	0.98	1.04	0.96
4TXCA024AC3+TDD080R9V3	NOMINAL	800	0.97	1.01	0.94
	LOW	700	0.95	0.98	0.93
	HIGH	900	0.98	1.04	0.95
4TXCA024AC3+TDX1B060A9H3	NOMINAL	800	0.97	1.02	0.96
	LOW	700	0.95	0.99	0.95
	HIGH	900	0.98	1.05	0.97
4TXCA024AC3+TDY060R9V3	NOMINAL	800	0.96	1.01	0.95
	LOW	700	0.94	0.98	0.94
	HIGH	900	0.98	1.04	0.96

CORRECTION FACTORS FOR OTHER COMBINATIONS (MULTIPLY DATA BY FACTOR)

INDOOR MODEL		CFM	MBTUH TOT	MBTUH SEN	SYST KW
4TXCA024AC3+TDY080R9V3	NOMINAL	800	0.96	1.01	0.95
	LOW	700	0.94	0.98	0.94
	HIGH	900	0.98	1.04	0.96
4TXCA024AC3+TUX1B060A9H3	NOMINAL	800	0.96	1.01	0.96
	LOW	700	0.94	0.98	0.95
	HIGH	900	0.98	1.04	0.97
4TXCA024AC3+TUY060R9V3	NOMINAL	800	0.96	1.01	0.94
	LOW	700	0.94	0.98	0.94
	HIGH	900	0.98	1.04	0.95
4TXCA024AC3+TUY080R9V3	NOMINAL	800	0.97	1.01	0.95
	LOW	700	0.95	0.98	0.94
	HIGH	900	0.98	1.04	0.96
4TXCB025AC3+TDD060R9V3	NOMINAL	800	1.00	1.04	0.98
	LOW	700	0.98	1.01	0.98
	HIGH	900	1.02	1.07	0.99
4TXCB025AC3+TDD080R9V3	NOMINAL	800	1.00	1.04	0.97
	LOW	700	0.98	1.01	0.97
	HIGH	900	1.02	1.07	0.98
4TXCB025AC3+TDX1B060A9H3	NOMINAL	800	1.00	1.05	1.01
	LOW	700	0.98	1.02	1.00
	HIGH	900	1.02	1.08	1.02
4TXCB025AC3+TDY060R9V3	NOMINAL	800	1.00	1.04	0.98
	LOW	700	0.98	1.01	0.98
	HIGH	900	1.02	1.07	0.99
4TXCB025AC3+TDY080R9V3	NOMINAL	800	1.00	1.04	0.98
	LOW	700	0.98	1.01	0.98
	HIGH	900	1.02	1.07	0.99
4TXCB025AC3+TUX1B060A9H3	NOMINAL	800	1.00	1.05	1.00
	LOW	700	0.98	1.01	0.99
	HIGH	900	1.02	1.08	1.01
4TXCB025AC3+TUY060R9V3	NOMINAL	800	1.00	1.03	0.98
	LOW	700	0.98	1.00	0.98
	HIGH	900	1.02	1.07	0.99
4TXCB025AC3+TUY080R9V3	NOMINAL	800	1.00	1.04	0.98
	LOW	700	0.98	1.01	0.98
	HIGH	900	1.02	1.07	0.99
4TXCB031AC3+TDD060R9V3	NOMINAL	800	1.00	1.04	0.98
	LOW	700	0.98	1.01	0.98
	HIGH	900	1.02	1.07	0.99
4TXCB031AC3+TDD080R9V3	NOMINAL	800	1.00	1.03	0.98
	LOW	700	0.98	1.00	0.97
	HIGH	900	1.02	1.07	0.99
4TXCB031AC3+TDX1B060A9H3	NOMINAL	800	1.00	1.05	1.01
	LOW	700	0.98	1.02	1.00
	HIGH	900	1.02	1.08	1.02
4TXCB031AC3+TDX1B080A9H3	NOMINAL	800	1.00	1.05	1.02
	LOW	700	0.98	1.02	1.01
	HIGH	900	1.02	1.08	1.03
4TXCB031AC3+TDY060R9V3	NOMINAL	800	1.00	1.04	0.98
	LOW	700	0.98	1.01	0.98
	HIGH	900	1.02	1.07	0.99
4TXCB031AC3+TDY080R9V3	NOMINAL	800	1.00	1.04	0.98
	LOW	700	0.98	1.01	0.98
	HIGH	900	1.02	1.07	0.99
4TXCB031AC3+TUX1B060A9H3	NOMINAL	800	1.00	1.05	1.00
	LOW	700	0.98	1.01	0.99
	HIGH	900	1.02	1.08	1.01
4TXCB031AC3+TUY060R9V3	NOMINAL	800	1.00	1.03	0.98
	LOW	700	0.98	1.00	0.97
	HIGH	900	1.02	1.07	0.99
4TXCB031AC3+TUY080R9V3	NOMINAL	800	1.00	1.04	0.98
	LOW	700	0.98	1.01	0.98
	HIGH	900	1.02	1.07	0.99

Performance Data
Cooling

4TWB3024A1

CORRECTION FACTORS FOR OTHER COMBINATIONS (MULTIPLY DATA BY FACTOR)

INDOOR MODEL		CFM	MBTUH TOT	MBTUH SEN	SYST KW
4TXFH018AS3+TDD060R9V3	NOMINAL	800	0.95	0.98	0.93
	LOW	700	0.93	0.95	0.92
	HIGH	900	0.97	1.01	0.94
4TXFH018AS3+TDD080R9V3	NOMINAL	800	0.95	0.98	0.92
	LOW	700	0.93	0.95	0.92
	HIGH	900	0.97	1.01	0.93
4TXFH018AS3+TDX1B060A9H3	NOMINAL	800	0.95	0.99	0.94
	LOW	700	0.93	0.96	0.94
	HIGH	900	0.97	1.02	0.95
4TXFH018AS3+TDY060R9V3	NOMINAL	800	0.95	0.98	0.93
	LOW	700	0.93	0.95	0.92
	HIGH	900	0.97	1.01	0.94
4TXFH018AS3+TDY080R9V3	NOMINAL	800	0.95	0.98	0.93
	LOW	700	0.93	0.95	0.92
	HIGH	900	0.97	1.01	0.94
4TXFH018AS3+TUX1B060A9H3	NOMINAL	800	0.95	0.99	0.95
	LOW	700	0.93	0.96	0.94
	HIGH	900	0.97	1.02	0.96
4TXFH018AS3+TUY060R9V3	NOMINAL	800	0.94	0.98	0.93
	LOW	700	0.92	0.95	0.92
	HIGH	900	0.96	1.01	0.94
4TXFH018AS3+TUY080R9V3	NOMINAL	800	0.95	0.98	0.93
	LOW	700	0.93	0.95	0.92
	HIGH	900	0.97	1.01	0.94
4TXFH033AS3+TDD060R9V3	NOMINAL	800	1.00	1.03	0.98
	LOW	700	0.98	1.00	0.98
	HIGH	900	1.02	1.07	0.99
4TXFH033AS3+TDD080R9V3	NOMINAL	800	1.01	1.04	0.98
	LOW	700	0.99	1.01	0.98
	HIGH	900	1.03	1.07	0.99
4TXFH033AS3+TDX1B060A9H3	NOMINAL	800	1.01	1.05	1.01
	LOW	700	0.99	1.02	1.00
	HIGH	900	1.03	1.08	1.02
4TXFH033AS3+TDY060R9V3	NOMINAL	800	1.00	1.03	0.98
	LOW	700	0.98	1.00	0.98
	HIGH	900	1.02	1.07	0.99
4TXFH033AS3+TDY080R9V3	NOMINAL	800	1.00	1.03	0.98
	LOW	700	0.98	1.00	0.98
	HIGH	900	1.02	1.07	0.99
4TXFH033AS3+TUD100R9V3	NOMINAL	800	1.00	1.03	0.98
	LOW	700	0.98	1.00	0.98
	HIGH	900	1.02	1.07	0.99
4TXFH033AS3+TUX1B060A9H3	NOMINAL	800	1.01	1.05	1.01
	LOW	700	0.99	1.02	1.00
	HIGH	900	1.03	1.08	1.02
4TXFH033AS3+TUY060R9V3	NOMINAL	800	1.00	1.03	0.98
	LOW	700	0.98	1.00	0.98
	HIGH	900	1.02	1.06	0.99

CORRECTION FACTORS FOR OTHER COMBINATIONS (MULTIPLY DATA BY FACTOR)

INDOOR MODEL		CFM	MBTUH TOT	MBTUH SEN	SYST KW
4TXFH033AS3+TUY080R9V3	NOMINAL	800	1.01	1.04	0.99
	LOW	700	0.99	1.01	0.98
	HIGH	900	1.03	1.07	1.00
TXH033A4+4AYTXVH-3+TDD060R9V3	NOMINAL	800	1.01	1.05	1.01
	LOW	700	0.99	1.01	1.00
	HIGH	900	1.03	1.08	1.02
TXH033A4+4AYTXVH-3+TDD080R9V3	NOMINAL	800	1.01	1.05	1.01
	LOW	700	0.99	1.01	1.00
	HIGH	900	1.03	1.08	1.02
TXH033A4+4AYTXVH-3+TDX1B040A9H2	NOMINAL	800	1.00	1.05	1.00
	LOW	700	0.98	1.01	0.99
	HIGH	900	1.02	1.08	1.01
TXH033A4+4AYTXVH-3+TDX1B060A9H3	NOMINAL	800	1.01	1.05	1.01
	LOW	700	0.99	1.02	1.00
	HIGH	900	1.03	1.08	1.02
TXH033A4+4AYTXVH-3+TDY060R9V3	NOMINAL	800	1.00	1.03	0.98
	LOW	700	0.98	1.00	0.98
	HIGH	900	1.02	1.07	0.99
TXH033A4+4AYTXVH-3+TDY080R9V3	NOMINAL	800	1.01	1.04	0.99
	LOW	700	0.99	1.01	0.98
	HIGH	900	1.03	1.07	1.00
TXH033A4+4AYTXVH-3+TUD060R9V3	NOMINAL	800	1.00	1.05	1.00
	LOW	700	0.98	1.01	0.99
	HIGH	900	1.02	1.08	1.01
TXH033A4+4AYTXVH-3+TUD080R9V3	NOMINAL	800	1.01	1.05	1.01
	LOW	700	0.99	1.02	1.00
	HIGH	900	1.03	1.08	1.02
TXH033A4+4AYTXVH-3+TUD1A040A9H2	NOMINAL	800	1.00	1.05	1.02
	LOW	700	0.98	1.01	1.01
	HIGH	900	1.02	1.08	1.03
TXH033A4+4AYTXVH-3+TUD1B060A9H3	NOMINAL	800	1.01	1.05	1.02
	LOW	700	0.99	1.02	1.01
	HIGH	900	1.03	1.08	1.03
TXH033A4+4AYTXVH-3+TUX1B040A9H2	NOMINAL	800	1.01	1.05	1.01
	LOW	700	0.99	1.02	1.00
	HIGH	900	1.03	1.08	1.02
TXH033A4+4AYTXVH-3+TUX1B060A9H3	NOMINAL	800	1.01	1.05	1.01
	LOW	700	0.99	1.02	1.00
	HIGH	900	1.03	1.08	1.02
TXH033A4+4AYTXVH-3+TUY060R9V3	NOMINAL	800	1.00	1.03	0.98
	LOW	700	0.98	1.00	0.98
	HIGH	900	1.02	1.07	0.99
TXH033A4+4AYTXVH-3+TUY080R9V3	NOMINAL	800	1.00	1.04	0.99
	LOW	700	0.98	1.01	0.98
	HIGH	900	1.02	1.07	1.00

Performance Data
Cooling

4TWB3030A1

4TWB3030A1 WITH 4TEC3F30A1 AT 1000 CFM

O.D. D.B.	I.D. W.B.	TOT. CAP.	SENS. CAP. AT ENTERING D.B. TEMP. 72	75	78	80	TOTAL KW
85	59	29.1	23.6	26.5	28.8	28.6	2.50
	63	30.3	19.2	22.1	25.0	26.9	2.51
	67	32.7	15.2	18.1	21.0	22.9	2.56
	71	35.3	11.2	14.1	16.9	18.9	2.58
95	59	27.0	22.7	25.6	27.0	27.0	2.69
	63	28.1	18.3	21.2	24.1	26.0	2.70
	67	30.3	14.3	17.2	20.1	22.0	2.75
	71	32.7	10.3	13.1	16.0	18.0	2.77
105	59	25.9	22.2	25.1	25.9	25.9	2.78
	63	27.0	17.8	20.7	23.6	25.6	2.80
	67	29.1	13.8	16.7	19.6	21.6	2.85
	71	31.4	9.8	12.7	15.6	17.5	2.87
115	59	22.7	20.8	22.7	22.7	22.7	3.06
	63	23.7	16.5	19.4	22.3	23.7	3.08
	67	25.5	12.5	15.4	18.3	20.2	3.13
	71	27.6	8.5	11.4	14.3	16.2	3.16

CORRECTION FACTORS FOR OTHER AIRFLOWS (MULTIPLY DATA BY FACTOR)

	AIRFLOW	TOTAL CAPACITY	SENSIBLE CAPACITY
LOW	875	0.98	0.98
HIGH	1125	1.02	1.02

NOTE: ALL TABLES ABOVE ARE AT ARI RATING CONDITIONS RATED WITH 25 FEET OF REFRIGERANT LINES.
* DRY COIL CONDITION (TOTAL CAPACITY = SENSIBLE CAPACITY)
TOTAL CAPACITY, COMP. KW AND APP. DEW PT. ARE VALID ONLY FOR WET COIL. ALL TEMPERATURES IN DEGREES F.

CORRECTION FACTORS FOR OTHER COMBINATIONS (MULTIPLY DATA BY FACTOR)

INDOOR MODEL		CFM	MBTUH TOT	MBTUH SEN	SYST KW
2TEH3F30A1+4AYTXVH-3	NOMINAL	1000	1.02	1.00	1.02
	LOW	875	1.00	0.97	1.01
	HIGH	1125	1.04	1.03	1.03
2TEH3F36A1+4AYTXVH-3	NOMINAL	1000	1.02	1.00	1.02
	LOW	875	1.00	0.97	1.01
	HIGH	1125	1.04	1.03	1.03
2TFB3F30B1+4AYTXVH-3	NOMINAL	1000	1.00	0.96	0.98
	LOW	875	0.98	0.93	0.97
	HIGH	1125	1.02	0.99	0.99
2TGB3F30A1+4AYTXVH-3	NOMINAL	1000	1.01	0.97	0.99
	LOW	875	0.99	0.94	0.98
	HIGH	1125	1.03	1.00	1.00
2TGB3F36A1+4AYTXVH-3	NOMINAL	1000	1.00	0.97	0.99
	LOW	875	0.98	0.94	0.98
	HIGH	1125	1.02	1.00	1.00
4TEC3F36A1	NOMINAL	1000	0.99	0.97	0.98
	LOW	875	0.97	0.94	0.97
	HIGH	1125	1.01	1.00	0.99
4TEE3F31A1	NOMINAL	1000	1.01	0.98	0.98
	LOW	875	0.99	0.95	0.97
	HIGH	1125	1.03	1.01	0.99
4TEE3F37A1	NOMINAL	1000	1.02	1.00	0.99
	LOW	875	0.99	0.97	0.98
	HIGH	1125	1.04	1.03	1.00
4TEP3F24A1	NOMINAL	1000	1.00	0.96	0.95
	LOW	875	0.98	0.93	0.94
	HIGH	1125	1.02	0.99	0.96
4TFE3F25B1	NOMINAL	1000	1.01	0.97	0.98
	LOW	875	0.99	0.94	0.97
	HIGH	1125	1.03	1.00	0.99
4TXCB031AC3	NOMINAL	1000	0.99	0.96	0.97
	LOW	875	0.97	0.93	0.96
	HIGH	1125	1.01	0.99	0.98

CORRECTION FACTORS FOR OTHER COMBINATIONS (MULTIPLY DATA BY FACTOR)

INDOOR MODEL		CFM	MBTUH TOT	MBTUH SEN	SYST KW
4TXCB031AC3+TDD060R9V3	NOMINAL	1000	1.00	0.98	0.96
	LOW	875	0.98	0.95	0.96
	HIGH	1125	1.02	1.01	0.97
4TXCB031AC3+TDD080R9V3	NOMINAL	1000	1.01	0.98	0.96
	LOW	875	0.99	0.95	0.96
	HIGH	1125	1.03	1.01	0.97
4TXCB031AC3+TDD1B060A9H3	NOMINAL	1000	1.01	0.99	0.97
	LOW	875	0.99	0.96	0.96
	HIGH	1125	1.03	1.02	0.98
4TXCB031AC3+TDD1B080A9H3	NOMINAL	1000	1.00	0.98	0.97
	LOW	875	0.98	0.95	0.96
	HIGH	1125	1.02	1.01	0.98
4TXCB031AC3+TDX1B060A9H3	NOMINAL	1000	1.01	0.98	0.97
	LOW	875	0.99	0.95	0.96
	HIGH	1125	1.03	1.01	0.98
4TXCB031AC3+TDX1B080A9H3	NOMINAL	1000	1.01	0.98	0.97
	LOW	875	0.99	0.95	0.96
	HIGH	1125	1.03	1.01	0.98
4TXCB031AC3+TDX1C100A9H4	NOMINAL	1000	1.00	0.99	0.98
	LOW	875	0.98	0.96	0.97
	HIGH	1125	1.02	1.02	0.99
4TXCB031AC3+TDY060R9V3	NOMINAL	1000	1.00	0.98	0.96
	LOW	875	0.98	0.95	0.95
	HIGH	1125	1.02	1.01	0.97
4TXCB031AC3+TDY080R9V3	NOMINAL	1000	1.00	0.97	0.96
	LOW	875	0.98	0.94	0.95
	HIGH	1125	1.02	1.00	0.97
4TXCB031AC3+TDY100R9V4	NOMINAL	1000	1.00	0.98	0.98
	LOW	875	0.98	0.95	0.97
	HIGH	1125	1.02	1.01	0.99
4TXCB031AC3+TUD060R9V3	NOMINAL	1000	1.00	0.98	0.96
	LOW	875	0.98	0.95	0.95
	HIGH	1125	1.02	1.01	0.97
4TXCB031AC3+TUD080R9V3	NOMINAL	1000	1.00	0.98	0.96
	LOW	875	0.98	0.95	0.95
	HIGH	1125	1.02	1.01	0.97
4TXCB031AC3+TUD080R9V4	NOMINAL	1000	1.01	0.98	0.96
	LOW	875	0.99	0.95	0.96
	HIGH	1125	1.03	1.01	0.97
4TXCB031AC3+TUD100R9V3	NOMINAL	1000	1.01	0.98	0.97
	LOW	875	0.99	0.95	0.96
	HIGH	1125	1.03	1.01	0.98
4TXCB031AC3+TUD1B060A9H3	NOMINAL	1000	1.01	0.99	0.98
	LOW	875	0.99	0.96	0.97
	HIGH	1125	1.03	1.02	0.99
4TXCB031AC3+TUD1B080A9H3	NOMINAL	1000	1.01	0.99	0.98
	LOW	875	0.99	0.96	0.97
	HIGH	1125	1.03	1.02	0.99
4TXCB031AC3+TUD1B100A9H3	NOMINAL	1000	1.01	0.99	0.98
	LOW	875	0.99	0.96	0.97
	HIGH	1125	1.03	1.02	0.99
4TXCB031AC3+TUD1C080A9H4	NOMINAL	1000	1.01	1.00	0.99
	LOW	875	0.99	0.97	0.98
	HIGH	1125	1.03	1.03	1.00
4TXCB031AC3+TUX1B060A9H3	NOMINAL	1000	1.01	0.99	0.98
	LOW	875	0.99	0.96	0.97
	HIGH	1125	1.03	1.02	0.99
4TXCB031AC3+TUY060R9V3	NOMINAL	1000	1.00	0.98	0.96
	LOW	875	0.98	0.95	0.95
	HIGH	1125	1.02	1.01	0.97
4TXCB031AC3+TUY080R9V3	NOMINAL	1000	1.01	0.98	0.96
	LOW	875	0.99	0.95	0.96
	HIGH	1125	1.03	1.01	0.97

Performance Data
Cooling

4TWB3030A1

CORRECTION FACTORS FOR OTHER COMBINATIONS (MULTIPLY DATA BY FACTOR)

INDOOR MODEL		CFM	MBTUH TOT	MBTUH SEN	SYST KW
4TXCB031AC3+TUY100R9V4	NOMINAL	1000	1.00	0.98	0.98
	LOW	875	0.98	0.95	0.97
	HIGH	1125	1.02	1.01	0.99
4TXCB031AS3+TDD060R9V3	NOMINAL	1000	1.02	1.01	0.99
	LOW	875	0.99	0.98	0.98
	HIGH	1125	1.04	1.04	1.00
4TXCB031AS3+TDD080R9V3	NOMINAL	1000	1.02	1.01	0.98
	LOW	875	0.99	0.98	0.97
	HIGH	1125	1.04	1.04	0.99
4TXCB031AS3+TDD1B060A9H3	NOMINAL	1000	1.02	1.01	0.98
	LOW	875	0.99	0.98	0.97
	HIGH	1125	1.04	1.04	0.99
4TXCB031AS3+TDD1B080A9H3	NOMINAL	1000	1.02	1.01	0.98
	LOW	875	1.00	0.98	0.97
	HIGH	1125	1.04	1.04	0.99
4TXCB031AS3+TDX1B060A9H3	NOMINAL	1000	1.01	1.01	0.99
	LOW	875	0.99	0.98	0.98
	HIGH	1125	1.03	1.04	1.00
4TXCB031AS3+TDX1B080A9H3	NOMINAL	1000	1.02	1.01	0.98
	LOW	875	1.00	0.98	0.97
	HIGH	1125	1.04	1.04	0.99
4TXCB031AS3+TDY060R9V3	NOMINAL	1000	1.02	1.01	0.98
	LOW	875	1.00	0.98	0.97
	HIGH	1125	1.04	1.04	0.99
4TXCB031AS3+TDY080R9V3	NOMINAL	1000	1.01	1.00	0.98
	LOW	875	0.99	0.97	0.97
	HIGH	1125	1.03	1.03	0.99
4TXCB031AS3+TUD060R9V3	NOMINAL	1000	1.01	1.00	0.98
	LOW	875	0.99	0.97	0.97
	HIGH	1125	1.03	1.03	0.99
4TXCB031AS3+TUD080R9V3	NOMINAL	1000	1.02	1.01	0.99
	LOW	875	0.99	0.98	0.98
	HIGH	1125	1.04	1.04	1.00
4TXCB031AS3+TUD1B060A9H3	NOMINAL	1000	1.02	1.02	0.99
	LOW	875	1.00	0.99	0.98
	HIGH	1125	1.04	1.05	1.00
4TXCB031AS3+TUD1B080A9H3	NOMINAL	1000	1.02	1.02	0.98
	LOW	875	1.00	0.99	0.97
	HIGH	1125	1.04	1.05	0.99
4TXCB031AS3+TUX1B060A9H3	NOMINAL	1000	1.02	1.01	0.99
	LOW	875	1.00	0.98	0.98
	HIGH	1125	1.04	1.04	1.00
4TXCB031AS3+TUX1B080A9H3	NOMINAL	1000	1.02	1.01	1.00
	LOW	875	0.99	0.98	0.99
	HIGH	1125	1.04	1.04	1.01
4TXCB031AS3+TUY060R9V3	NOMINAL	1000	1.02	1.00	0.98
	LOW	875	0.99	0.97	0.97
	HIGH	1125	1.04	1.03	0.99
4TXCB031AS3+TUY080R9V3	NOMINAL	1000	1.01	1.00	0.97
	LOW	875	0.99	0.97	0.96
	HIGH	1125	1.03	1.03	0.98
4TXFH033AS3+TDD060R9V3	NOMINAL	1000	1.00	0.97	0.96
	LOW	875	0.98	0.94	0.95
	HIGH	1125	1.02	1.00	0.97
4TXFH033AS3+TDD080R9V3	NOMINAL	1000	1.00	0.97	0.96
	LOW	875	0.98	0.94	0.95
	HIGH	1125	1.02	1.00	0.97
4TXFH033AS3+TDD1B060A9H3	NOMINAL	1000	1.01	0.99	0.98
	LOW	875	0.99	0.96	0.97
	HIGH	1125	1.03	1.02	0.99
4TXFH033AS3+TDD1B080A9H3	NOMINAL	1000	1.01	0.98	0.98
	LOW	875	0.99	0.95	0.97
	HIGH	1125	1.03	1.01	0.99

CORRECTION FACTORS FOR OTHER COMBINATIONS (MULTIPLY DATA BY FACTOR)

INDOOR MODEL		CFM	MBTUH TOT	MBTUH SEN	SYST KW
4TXFH033AS3+TDX1B060A9H3	NOMINAL	1000	1.01	0.98	0.97
	LOW	875	0.99	0.95	0.96
	HIGH	1125	1.03	1.01	0.98
4TXFH033AS3+TDX1B080A9H3	NOMINAL	1000	1.01	0.98	0.97
	LOW	875	0.99	0.95	0.96
	HIGH	1125	1.03	1.01	0.98
4TXFH033AS3+TDY060R9V3	NOMINAL	1000	1.01	0.98	0.96
	LOW	875	0.99	0.95	0.96
	HIGH	1125	1.03	1.01	0.97
4TXFH033AS3+TDY080R9V3	NOMINAL	1000	1.00	0.97	0.96
	LOW	875	0.98	0.94	0.95
	HIGH	1125	1.02	1.00	0.97
4TXFH033AS3+TDY100R9V4	NOMINAL	1000	1.00	0.98	0.98
	LOW	875	0.98	0.95	0.97
	HIGH	1125	1.02	1.01	0.99
4TXFH033AS3+TUD060R9V3	NOMINAL	1000	1.00	0.97	0.96
	LOW	875	0.98	0.94	0.95
	HIGH	1125	1.02	1.00	0.97
4TXFH033AS3+TUD080R9V3	NOMINAL	1000	1.01	0.98	0.97
	LOW	875	0.99	0.95	0.96
	HIGH	1125	1.03	1.01	0.98
4TXFH033AS3+TUD080R9V4	NOMINAL	1000	1.01	0.98	0.96
	LOW	875	0.99	0.95	0.96
	HIGH	1125	1.03	1.01	0.97
4TXFH033AS3+TUD100R9V3	NOMINAL	1000	1.00	0.97	0.96
	LOW	875	0.98	0.94	0.96
	HIGH	1125	1.02	1.00	0.97
4TXFH033AS3+TUD1B060A9H3	NOMINAL	1000	1.01	0.99	0.98
	LOW	875	0.99	0.96	0.97
	HIGH	1125	1.03	1.02	0.99
4TXFH033AS3+TUD1B080A9H3	NOMINAL	1000	1.01	0.99	0.98
	LOW	875	0.99	0.96	0.97
	HIGH	1125	1.03	1.02	0.99
4TXFH033AS3+TUD1B100A9H3	NOMINAL	1000	1.01	0.99	0.98
	LOW	875	0.99	0.96	0.97
	HIGH	1125	1.03	1.02	0.99
4TXFH033AS3+TUX1B060A9H3	NOMINAL	1000	1.00	0.98	0.98
	LOW	875	0.98	0.95	0.97
	HIGH	1125	1.02	1.01	0.99
4TXFH033AS3+TUY060R9V3	NOMINAL	1000	1.00	0.97	0.96
	LOW	875	0.98	0.94	0.96
	HIGH	1125	1.02	1.00	0.97
4TXFH033AS3+TUY080R9V3	NOMINAL	1000	1.01	0.98	0.96
	LOW	875	0.99	0.95	0.96
	HIGH	1125	1.03	1.01	0.97
4TXFH033AS3+TUY100R9V4	NOMINAL	1000	1.00	0.98	0.98
	LOW	875	0.98	0.95	0.97
	HIGH	1125	1.02	1.01	0.99
TWE042C14+4AYTXVH-3	NOMINAL	1000	0.98	0.97	0.97
	LOW	875	0.96	0.94	0.96
	HIGH	1125	1.00	1.00	0.98
TXH033A4+4AYTXVH-3+TDD060R9V3	NOMINAL	1000	1.00	0.98	0.98
	LOW	875	0.98	0.95	0.97
	HIGH	1125	1.02	1.01	0.99
TXH033A4+4AYTXVH-3+TDD080R9V3	NOMINAL	1000	1.00	0.98	0.97
	LOW	875	0.98	0.95	0.96
	HIGH	1125	1.02	1.01	0.98
TXH033A4+4AYTXVH-3+TDD1B060A9H3	NOMINAL	1000	1.01	0.99	0.98
	LOW	875	0.99	0.96	0.97
	HIGH	1125	1.03	1.02	0.99
TXH033A4+4AYTXVH-3+TDD1B080A9H3	NOMINAL	1000	1.01	0.98	0.98
	LOW	875	0.99	0.95	0.97
	HIGH	1125	1.03	1.01	0.99

Performance Data
Cooling

4TWB3030A1

CORRECTION FACTORS FOR OTHER COMBINATIONS (MULTIPLY DATA BY FACTOR)

INDOOR MODEL		CFM	MBTUH TOT	MBTUH SEN	SYST KW
TXH033A4+4AYTXVH-3+TDX1B060A9H3	NOMINAL	1000	1.01	0.98	0.97
	LOW	875	0.99	0.95	0.96
	HIGH	1125	1.03	1.01	0.98
TXH033A4+4AYTXVH-3+TDX1B080A9H3	NOMINAL	1000	1.01	0.98	0.97
	LOW	875	0.99	0.95	0.96
	HIGH	1125	1.03	1.01	0.98
TXH033A4+4AYTXVH-3+TDY060R9V3	NOMINAL	1000	1.01	0.98	0.96
	LOW	875	0.99	0.95	0.96
	HIGH	1125	1.03	1.01	0.97
TXH033A4+4AYTXVH-3+TDY080R9V3	NOMINAL	1000	1.00	0.97	0.96
	LOW	875	0.98	0.94	0.95
	HIGH	1125	1.02	1.00	0.97
TXH033A4+4AYTXVH-3+TUD060R9V3	NOMINAL	1000	1.00	0.98	0.97
	LOW	875	0.98	0.95	0.96
	HIGH	1125	1.02	1.01	0.98
TXH033A4+4AYTXVH-3+TUD080R9V3	NOMINAL	1000	1.00	0.98	0.97
	LOW	875	0.98	0.95	0.96
	HIGH	1125	1.02	1.01	0.98
TXH033A4+4AYTXVH-3+TUD1A040A9H2	NOMINAL	1000	1.00	0.98	0.97
	LOW	875	0.98	0.95	0.96
	HIGH	1125	1.02	1.01	0.98

CORRECTION FACTORS FOR OTHER COMBINATIONS (MULTIPLY DATA BY FACTOR)

INDOOR MODEL		CFM	MBTUH TOT	MBTUH SEN	SYST KW
TXH033A4+4AYTXVH-3+TUD1B060A9H3	NOMINAL	1000	1.01	0.99	0.98
	LOW	875	0.99	0.96	0.97
	HIGH	1125	1.03	1.02	0.99
TXH033A4+4AYTXVH-3+TUD1B080A9H3	NOMINAL	1000	1.01	0.99	0.98
	LOW	875	0.99	0.96	0.97
	HIGH	1125	1.03	1.02	0.99
TXH033A4+4AYTXVH-3+TUX1B040A9H2	NOMINAL	1000	1.00	0.98	0.97
	LOW	875	0.98	0.95	0.96
	HIGH	1125	1.02	1.01	0.98
TXH033A4+4AYTXVH-3+TUX1B060A9H3	NOMINAL	1000	1.00	0.98	0.98
	LOW	875	0.98	0.95	0.97
	HIGH	1125	1.02	1.01	0.99
TXH033A4+4AYTXVH-3+TUY060R9V3	NOMINAL	1000	1.00	0.97	0.96
	LOW	875	0.98	0.94	0.96
	HIGH	1125	1.02	1.00	0.97
TXH033A4+4AYTXVH-3+TUY080R9V3	NOMINAL	1000	1.01	0.98	0.96
	LOW	875	0.99	0.95	0.96
	HIGH	1125	1.03	1.01	0.97

Performance Data
Cooling

4TWB3036A1

4TWB3036A1 WITH 4TEC3F36A1 AT 1200 CFM

O.D. D.B.	I.D. W.B.	TOT. CAP.	SENS. CAP. AT ENTERING D.B. TEMP. 72	75	78	80	TOTAL KW
85	59	32.5	26.5	29.8	32.5	32.5	2.76
	63	33.9	21.5	24.8	28.0	30.2	2.78
	67	36.6	16.9	20.2	23.5	25.7	2.83
	71	39.5	12.3	15.6	18.9	21.1	2.85
95	59	30.8	25.7	29.0	30.8	30.8	3.07
	63	32.1	20.7	24.0	27.3	29.5	3.09
	67	34.6	16.1	19.4	22.7	24.9	3.15
	71	37.4	11.6	14.9	18.1	20.4	3.17
105	59	29.9	25.3	28.6	29.9	29.9	3.23
	63	31.2	20.4	23.6	26.9	29.1	3.25
	67	33.6	15.8	19.1	22.4	24.6	3.30
	71	36.3	11.2	14.5	17.8	20.0	3.34
115	59	27.3	24.2	27.3	27.3	27.3	3.70
	63	28.5	19.3	22.6	25.9	28.1	3.72
	67	30.7	14.7	18.0	21.3	23.5	3.78
	71	33.1	10.2	13.4	16.7	18.9	3.82

CORRECTION FACTORS FOR OTHER AIRFLOWS (MULTIPLY DATA BY FACTOR)

	AIRFLOW	TOTAL CAPACITY	SENSIBLE CAPACITY
LOW	1050	0.98	0.98
HIGH	1350	1.02	1.02

NOTE: ALL TABLES ABOVE ARE AT ARI RATING CONDITIONS RATED WITH 25 FEET OF REFRIGERANT LINES.
* DRY COIL CONDITION (TOTAL CAPACITY = SENSIBLE CAPACITY)
TOTAL CAPACITY, COMP. KW AND APP. DEW PT. ARE VALID ONLY FOR WET COIL. ALL TEMPERATURES IN DEGREES F.

CORRECTION FACTORS FOR OTHER COMBINATIONS (MULTIPLY DATA BY FACTOR)

INDOOR MODEL		CFM	MBTUH TOT	MBTUH SEN	SYST KW
2TEH3F36A1+4AYTXVH-3	NOMINAL	1200	1.02	1.02	1.02
	LOW	1050	1.00	0.99	1.01
	HIGH	1350	1.04	1.05	1.03
2TGB3F36A1+4AYTXVH-3	NOMINAL	1200	1.02	0.99	1.01
	LOW	1050	1.00	0.96	1.00
	HIGH	1350	1.04	1.02	1.02
2TGB3F42A1+4AYTXVH-3	NOMINAL	1200	1.04	1.02	1.05
	LOW	1050	1.02	0.99	1.04
	HIGH	1350	1.06	1.05	1.06
4TEE3F31A1	NOMINAL	1200	1.00	0.97	0.99
	LOW	1050	0.98	0.94	0.98
	HIGH	1350	1.02	1.00	1.00
4TEE3F37A1	NOMINAL	1200	1.02	1.02	1.01
	LOW	1050	1.00	0.99	1.00
	HIGH	1350	1.05	1.05	1.02
4TXCB031AS3	NOMINAL	1200	1.01	1.01	1.01
	LOW	1050	0.99	0.98	1.00
	HIGH	1350	1.03	1.04	1.02
4TXCB031AS3+TDD060R9V3	NOMINAL	1200	1.01	1.02	1.00
	LOW	1050	0.99	0.99	0.99
	HIGH	1350	1.03	1.05	1.01
4TXCB031AS3+TDD080R9V3	NOMINAL	1200	1.02	1.03	1.00
	LOW	1050	1.00	1.00	0.99
	HIGH	1350	1.04	1.06	1.01
4TXCB031AS3+TDD1B060A9H3	NOMINAL	1200	1.03	1.03	1.00
	LOW	1050	1.01	1.00	0.99
	HIGH	1350	1.05	1.06	1.01
4TXCB031AS3+TDD1B080A9H3	NOMINAL	1200	1.03	1.03	1.00
	LOW	1050	1.01	1.00	0.99
	HIGH	1350	1.05	1.06	1.01
4TXCB031AS3+TDX1B060A9H3	NOMINAL	1200	1.03	1.03	1.00
	LOW	1050	1.01	1.00	0.99
	HIGH	1350	1.05	1.06	1.01

CORRECTION FACTORS FOR OTHER COMBINATIONS (MULTIPLY DATA BY FACTOR)

INDOOR MODEL		CFM	MBTUH TOT	MBTUH SEN	SYST KW
4TXCB031AS3+TDX1B080A9H3	NOMINAL	1200	1.01	1.02	1.00
	LOW	1050	0.99	0.99	0.99
	HIGH	1350	1.03	1.05	1.01
4TXCB031AS3+TDY060R9V3	NOMINAL	1200	1.02	1.02	1.00
	LOW	1050	1.00	0.99	0.99
	HIGH	1350	1.04	1.05	1.01
4TXCB031AS3+TDY080R9V3	NOMINAL	1200	1.02	1.02	0.99
	LOW	1050	1.00	0.99	0.98
	HIGH	1350	1.04	1.05	1.00
4TXCB031AS3+TUD060R9V3	NOMINAL	1200	1.01	1.02	1.00
	LOW	1050	0.99	0.99	0.99
	HIGH	1350	1.03	1.05	1.01
4TXCB031AS3+TUD080R9V3	NOMINAL	1200	1.01	1.02	1.00
	LOW	1050	0.99	0.99	0.99
	HIGH	1350	1.03	1.05	1.01
4TXCB031AS3+TUD1B060A9H3	NOMINAL	1200	1.03	1.04	1.00
	LOW	1050	1.01	1.00	0.99
	HIGH	1350	1.05	1.07	1.01
4TXCB031AS3+TUD1B080A9H3	NOMINAL	1200	1.03	1.04	1.01
	LOW	1050	1.01	1.00	1.00
	HIGH	1350	1.05	1.07	1.02
4TXCB031AS3+TUX1B060A9H3	NOMINAL	1200	1.02	1.02	1.00
	LOW	1050	1.00	0.99	0.99
	HIGH	1350	1.04	1.05	1.01
4TXCB031AS3+TUX1B080A9H3	NOMINAL	1200	1.03	1.03	1.00
	LOW	1050	1.01	1.00	0.99
	HIGH	1350	1.05	1.06	1.01
4TXCB031AS3+TUY060R9V3	NOMINAL	1200	1.02	1.02	0.99
	LOW	1050	1.00	0.99	0.98
	HIGH	1350	1.04	1.05	1.00
4TXCB031AS3+TUY080R9V3	NOMINAL	1200	1.02	1.02	0.99
	LOW	1050	1.00	0.99	0.98
	HIGH	1350	1.05	1.05	1.00
4TXCB036AC3	NOMINAL	1200	1.02	1.02	1.01
	LOW	1050	1.00	0.99	1.00
	HIGH	1350	1.04	1.05	1.02
4TXCB036AC3+TDD060R9V3	NOMINAL	1200	1.03	1.04	1.00
	LOW	1050	1.01	1.01	0.99
	HIGH	1350	1.05	1.07	1.01
4TXCB036AC3+TDD080R9V3	NOMINAL	1200	1.03	1.04	1.00
	LOW	1050	1.01	1.01	0.99
	HIGH	1350	1.05	1.07	1.01
4TXCB036AC3+TDD1B060A9H3	NOMINAL	1200	1.03	1.05	1.00
	LOW	1050	1.01	1.02	0.99
	HIGH	1350	1.05	1.08	1.01
4TXCB036AC3+TDD1B080A9H3	NOMINAL	1200	1.03	1.05	1.00
	LOW	1050	1.01	1.02	0.99
	HIGH	1350	1.05	1.08	1.01
4TXCB036AC3+TDX1B060A9H3	NOMINAL	1200	1.03	1.05	1.00
	LOW	1050	1.01	1.02	0.99
	HIGH	1350	1.05	1.08	1.01
4TXCB036AC3+TDX1B080A9H3	NOMINAL	1200	1.02	1.04	1.01
	LOW	1050	1.00	1.01	1.00
	HIGH	1350	1.04	1.07	1.02
4TXCB036AC3+TDX1C100A9H4	NOMINAL	1200	1.03	1.05	1.00
	LOW	1050	1.01	1.02	0.99
	HIGH	1350	1.05	1.08	1.01
4TXCB036AC3+TDY060R9V3	NOMINAL	1200	1.02	1.04	1.00
	LOW	1050	1.00	1.00	0.99
	HIGH	1350	1.04	1.07	1.01
4TXCB036AC3+TDY080R9V3	NOMINAL	1200	1.02	1.03	1.00
	LOW	1050	1.00	1.00	0.99
	HIGH	1350	1.04	1.06	1.01

Performance Data
Cooling

4TWB3036A1

CORRECTION FACTORS FOR OTHER COMBINATIONS (MULTIPLY DATA BY FACTOR)

INDOOR MODEL		CFM	MBTUH TOT	MBTUH SEN	SYST KW
4TXCB036AC3+TDY100R9V4	NOMINAL	1200	1.03	1.04	1.00
	LOW	1050	1.01	1.01	0.99
	HIGH	1350	1.05	1.07	1.01
4TXCB036AC3+TUD060R9V3	NOMINAL	1200	1.02	1.04	1.00
	LOW	1050	1.00	1.01	0.99
	HIGH	1350	1.04	1.07	1.01
4TXCB036AC3+TUD080R9V3	NOMINAL	1200	1.03	1.04	1.00
	LOW	1050	1.01	1.01	0.99
	HIGH	1350	1.05	1.07	1.01
4TXCB036AC3+TUD080R9V4	NOMINAL	1200	1.03	1.04	1.00
	LOW	1050	1.01	1.01	0.99
	HIGH	1350	1.05	1.07	1.01
4TXCB036AC3+TUD100R9V3	NOMINAL	1200	1.02	1.04	1.00
	LOW	1050	1.00	1.01	0.99
	HIGH	1350	1.04	1.07	1.01
4TXCB036AC3+TUD1B060A9H3	NOMINAL	1200	1.03	1.05	1.01
	LOW	1050	1.01	1.02	1.00
	HIGH	1350	1.05	1.08	1.02
4TXCB036AC3+TUD1B080A9H3	NOMINAL	1200	1.03	1.05	1.01
	LOW	1050	1.01	1.02	1.00
	HIGH	1350	1.05	1.08	1.02
4TXCB036AC3+TUD1B100A9H3	NOMINAL	1200	1.03	1.05	1.01
	LOW	1050	1.01	1.02	1.00
	HIGH	1350	1.05	1.09	1.02
4TXCB036AC3+TUD1C080A9H4	NOMINAL	1200	1.03	1.05	1.01
	LOW	1050	1.01	1.02	1.00
	HIGH	1350	1.05	1.09	1.02
4TXCB036AC3+TUX1B060A9H3	NOMINAL	1200	1.03	1.05	1.01
	LOW	1050	1.01	1.02	1.00
	HIGH	1350	1.05	1.08	1.02
4TXCB036AC3+TUX1B080A9H3	NOMINAL	1200	1.03	1.05	1.00
	LOW	1050	1.01	1.02	0.99
	HIGH	1350	1.05	1.08	1.01
4TXCB036AC3+TUX1C100A9H4	NOMINAL	1200	1.03	1.05	1.01
	LOW	1050	1.01	1.02	1.00
	HIGH	1350	1.05	1.09	1.02
4TXCB036AC3+TUY060R9V3	NOMINAL	1200	1.02	1.04	1.00
	LOW	1050	1.00	1.01	0.99
	HIGH	1350	1.04	1.07	1.01
4TXCB036AC3+TUY080R9V3	NOMINAL	1200	1.02	1.04	0.99
	LOW	1050	1.00	1.01	0.98
	HIGH	1350	1.05	1.07	1.00
4TXCB036AC3+TUY100R9V4	NOMINAL	1200	1.03	1.04	1.00
	LOW	1050	1.01	1.01	0.99
	HIGH	1350	1.05	1.07	1.01
4TXCB042AC3+TDD060R9V3	NOMINAL	1200	1.01	1.04	0.98
	LOW	1050	0.99	1.00	0.97
	HIGH	1350	1.03	1.07	0.99
4TXCB042AC3+TDD080R9V3	NOMINAL	1200	1.01	1.04	0.98
	LOW	1050	0.99	1.00	0.97
	HIGH	1350	1.03	1.07	0.99
4TXCB042AC3+TDD1B060A9H3	NOMINAL	1200	1.00	1.03	0.99
	LOW	1050	0.98	1.00	0.98
	HIGH	1350	1.02	1.06	1.00
4TXCB042AC3+TDD1B080A9H3	NOMINAL	1200	1.00	1.03	0.99
	LOW	1050	0.98	1.00	0.98
	HIGH	1350	1.02	1.06	1.00
4TXCB042AC3+TDX1B060A9H3	NOMINAL	1200	0.99	1.03	0.98
	LOW	1050	0.97	1.00	0.97
	HIGH	1350	1.01	1.06	0.99
4TXCB042AC3+TDX1B080A9H3	NOMINAL	1200	0.99	1.03	0.98
	LOW	1050	0.97	1.00	0.97
	HIGH	1350	1.01	1.06	0.99

CORRECTION FACTORS FOR OTHER COMBINATIONS (MULTIPLY DATA BY FACTOR)

INDOOR MODEL		CFM	MBTUH TOT	MBTUH SEN	SYST KW
4TXCB042AC3+TDX1C100A9H4	NOMINAL	1200	1.01	1.05	1.01
	LOW	1050	0.99	1.02	1.00
	HIGH	1350	1.03	1.08	1.02
4TXCB042AC3+TDY060R9V3	NOMINAL	1200	1.00	1.03	0.98
	LOW	1050	0.98	1.00	0.97
	HIGH	1350	1.02	1.06	0.99
4TXCB042AC3+TDY080R9V3	NOMINAL	1200	1.00	1.03	1.00
	LOW	1050	0.98	1.00	0.99
	HIGH	1350	1.02	1.06	1.01
4TXCB042AC3+TDY100R9V4	NOMINAL	1200	1.00	1.03	0.98
	LOW	1050	0.98	1.00	0.97
	HIGH	1350	1.02	1.06	0.99
4TXCB042AC3+TUD060R9V3	NOMINAL	1200	1.01	1.03	0.98
	LOW	1050	0.99	1.00	0.97
	HIGH	1350	1.03	1.06	0.99
4TXCB042AC3+TUD080R9V3	NOMINAL	1200	1.01	1.03	0.97
	LOW	1050	0.99	1.00	0.96
	HIGH	1350	1.03	1.06	0.98
4TXCB042AC3+TUD080R9V4	NOMINAL	1200	1.01	1.04	0.98
	LOW	1050	0.99	1.01	0.97
	HIGH	1350	1.03	1.07	0.99
4TXCB042AC3+TUD100R9V3	NOMINAL	1200	1.00	1.03	0.98
	LOW	1050	0.98	1.00	0.97
	HIGH	1350	1.02	1.06	0.99
4TXCB042AC3+TUD1B060A9H3	NOMINAL	1200	1.00	1.04	0.99
	LOW	1050	0.98	1.00	0.98
	HIGH	1350	1.02	1.07	1.00
4TXCB042AC3+TUD1B080A9H3	NOMINAL	1200	1.01	1.04	0.99
	LOW	1050	0.99	1.01	0.98
	HIGH	1350	1.03	1.07	1.00
4TXCB042AC3+TUD1B100A9H3	NOMINAL	1200	1.00	1.04	0.99
	LOW	1050	0.98	1.00	0.98
	HIGH	1350	1.02	1.07	1.00
4TXCB042AC3+TUX1B060A9H3	NOMINAL	1200	0.99	1.03	0.99
	LOW	1050	0.97	1.00	0.98
	HIGH	1350	1.01	1.06	1.00
4TXCB042AC3+TUX1B080A9H3	NOMINAL	1200	1.01	1.04	0.99
	LOW	1050	0.99	1.00	0.98
	HIGH	1350	1.03	1.07	1.00
4TXCB042AC3+TUY060R9V3	NOMINAL	1200	1.01	1.03	0.98
	LOW	1050	0.99	1.00	0.97
	HIGH	1350	1.03	1.06	0.99
4TXCB042AC3+TUY080R9V3	NOMINAL	1200	1.01	1.03	0.98
	LOW	1050	0.99	1.00	0.97
	HIGH	1350	1.03	1.06	0.99
4TXCB042AC3+TUY100R9V4	NOMINAL	1200	1.01	1.04	0.98
	LOW	1050	0.99	1.00	0.97
	HIGH	1350	1.03	1.07	0.99
4TXCC037AC3	NOMINAL	1200	1.02	1.02	1.01
	LOW	1050	1.00	0.99	1.00
	HIGH	1350	1.04	1.05	1.02
4TXCC037AC3+TDD060R9V3	NOMINAL	1200	1.03	1.04	1.00
	LOW	1050	1.01	1.01	0.99
	HIGH	1350	1.05	1.07	1.01
4TXCC037AC3+TDD080R9V3	NOMINAL	1200	1.03	1.04	1.00
	LOW	1050	1.01	1.01	0.99
	HIGH	1350	1.05	1.07	1.01
4TXCC037AC3+TDD1B060A9H3	NOMINAL	1200	1.03	1.05	1.01
	LOW	1050	1.01	1.02	1.00
	HIGH	1350	1.05	1.08	1.02
4TXCC037AC3+TDD1B080A9H3	NOMINAL	1200	1.03	1.05	1.01
	LOW	1050	1.01	1.02	1.00
	HIGH	1350	1.05	1.08	1.02

Performance Data
Cooling

4TWB3036A1

CORRECTION FACTORS FOR OTHER COMBINATIONS (MULTIPLY DATA BY FACTOR)

INDOOR MODEL		CFM	MBTUH TOT	MBTUH SEN	SYST KW
4TXCC037AC3+TDX1B060A9H3	NOMINAL	1200	1.03	1.04	1.00
	LOW	1050	1.01	1.01	0.99
	HIGH	1350	1.05	1.07	1.01
4TXCC037AC3+TDX1B080A9H3	NOMINAL	1200	1.02	1.04	1.01
	LOW	1050	1.00	1.01	1.00
	HIGH	1350	1.04	1.07	1.02
4TXCC037AC3+TDX1C100A9H4	NOMINAL	1200	1.03	1.05	1.01
	LOW	1050	1.01	1.02	1.00
	HIGH	1350	1.05	1.09	1.02
4TXCC037AC3+TDY060R9V3	NOMINAL	1200	1.03	1.04	1.00
	LOW	1050	1.01	1.01	0.99
	HIGH	1350	1.05	1.07	1.01
4TXCC037AC3+TDY080R9V3	NOMINAL	1200	1.02	1.04	1.00
	LOW	1050	1.00	1.01	0.99
	HIGH	1350	1.04	1.07	1.01
4TXCC037AC3+TDY100R9V4	NOMINAL	1200	1.03	1.04	1.00
	LOW	1050	1.01	1.01	0.99
	HIGH	1350	1.05	1.07	1.01
4TXCC037AC3+TUD060R9V3	NOMINAL	1200	1.02	1.04	1.00
	LOW	1050	1.00	1.01	0.99
	HIGH	1350	1.05	1.07	1.01
4TXCC037AC3+TUD080R9V3	NOMINAL	1200	1.03	1.05	1.00
	LOW	1050	1.01	1.02	0.99
	HIGH	1350	1.05	1.08	1.01
4TXCC037AC3+TUD080R9V4	NOMINAL	1200	1.04	1.05	1.01
	LOW	1050	1.01	1.02	1.00
	HIGH	1350	1.06	1.09	1.02
4TXCC037AC3+TUD100R9V3	NOMINAL	1200	1.02	1.04	1.00
	LOW	1050	1.00	1.01	0.99
	HIGH	1350	1.05	1.07	1.01
4TXCC037AC3+TUD1B060A9H3	NOMINAL	1200	1.03	1.05	1.01
	LOW	1050	1.01	1.02	1.00
	HIGH	1350	1.05	1.09	1.02
4TXCC037AC3+TUD1B080A9H3	NOMINAL	1200	1.03	1.05	1.01
	LOW	1050	1.01	1.02	1.00
	HIGH	1350	1.05	1.09	1.02
4TXCC037AC3+TUD1B100A9H3	NOMINAL	1200	1.03	1.05	1.01
	LOW	1050	1.01	1.02	1.00
	HIGH	1350	1.05	1.09	1.02
4TXCC037AC3+TUD1C080A9H4	NOMINAL	1200	1.03	1.05	1.02
	LOW	1050	1.01	1.02	1.01
	HIGH	1350	1.05	1.09	1.03
4TXCC037AC3+TUX1B060A9H3	NOMINAL	1200	1.02	1.04	1.01
	LOW	1050	1.00	1.01	1.00
	HIGH	1350	1.04	1.07	1.02
4TXCC037AC3+TUX1B080A9H3	NOMINAL	1200	1.03	1.05	1.01
	LOW	1050	1.01	1.02	1.00
	HIGH	1350	1.05	1.08	1.02
4TXCC037AC3+TUX1C100A9H4	NOMINAL	1200	1.03	1.05	1.02
	LOW	1050	1.01	1.02	1.01
	HIGH	1350	1.05	1.09	1.03
4TXCC037AC3+TUY060R9V3	NOMINAL	1200	1.02	1.04	1.00
	LOW	1050	1.00	1.01	0.99
	HIGH	1350	1.05	1.07	1.01
4TXCC037AC3+TUY080R9V3	NOMINAL	1200	1.03	1.04	1.00
	LOW	1050	1.01	1.01	0.99
	HIGH	1350	1.05	1.07	1.01
4TXCC037AC3+TUY100R9V4	NOMINAL	1200	1.03	1.05	1.01
	LOW	1050	1.01	1.02	1.00
	HIGH	1350	1.05	1.08	1.02
4TXCC043AC3+TDD060R9V3	NOMINAL	1200	1.01	1.04	0.98
	LOW	1050	0.99	1.01	0.97
	HIGH	1350	1.03	1.07	0.99

CORRECTION FACTORS FOR OTHER COMBINATIONS (MULTIPLY DATA BY FACTOR)

INDOOR MODEL		CFM	MBTUH TOT	MBTUH SEN	SYST KW
4TXCC043AC3+TDD080R9V3	NOMINAL	1200	1.01	1.04	0.98
	LOW	1050	0.99	1.01	0.97
	HIGH	1350	1.03	1.07	0.99
4TXCC043AC3+TDD1B060A9H3	NOMINAL	1200	1.00	1.04	0.99
	LOW	1050	0.98	1.00	0.98
	HIGH	1350	1.02	1.07	1.00
4TXCC043AC3+TDD1B080A9H3	NOMINAL	1200	1.00	1.04	0.99
	LOW	1050	0.98	1.00	0.98
	HIGH	1350	1.02	1.07	1.00
4TXCC043AC3+TDX1B060A9H3	NOMINAL	1200	1.00	1.04	0.99
	LOW	1050	0.98	1.00	0.98
	HIGH	1350	1.02	1.07	1.00
4TXCC043AC3+TDX1B080A9H3	NOMINAL	1200	1.00	1.03	0.99
	LOW	1050	0.98	1.00	0.98
	HIGH	1350	1.02	1.06	1.00
4TXCC043AC3+TDX1C100A9H4	NOMINAL	1200	1.01	1.05	1.01
	LOW	1050	0.99	1.02	1.00
	HIGH	1350	1.03	1.08	1.02
4TXCC043AC3+TDY060R9V3	NOMINAL	1200	1.01	1.04	0.98
	LOW	1050	0.99	1.00	0.97
	HIGH	1350	1.03	1.07	0.99
4TXCC043AC3+TDY080R9V3	NOMINAL	1200	1.00	1.03	0.98
	LOW	1050	0.98	1.00	0.97
	HIGH	1350	1.02	1.06	0.99
4TXCC043AC3+TDY100R9V4	NOMINAL	1200	1.01	1.04	0.98
	LOW	1050	0.99	1.00	0.97
	HIGH	1350	1.03	1.07	0.99
4TXCC043AC3+TUD060R9V3	NOMINAL	1200	1.01	1.03	0.98
	LOW	1050	0.99	1.00	0.97
	HIGH	1350	1.03	1.06	0.99
4TXCC043AC3+TUD080R9V3	NOMINAL	1200	1.01	1.03	0.98
	LOW	1050	0.99	1.00	0.97
	HIGH	1350	1.03	1.06	0.99
4TXCC043AC3+TUD080R9V4	NOMINAL	1200	1.01	1.04	0.98
	LOW	1050	0.99	1.01	0.97
	HIGH	1350	1.03	1.07	0.99
4TXCC043AC3+TUD100R9V3	NOMINAL	1200	1.00	1.03	0.98
	LOW	1050	0.98	1.00	0.97
	HIGH	1350	1.02	1.06	0.99
4TXCC043AC3+TUD1B060A9H3	NOMINAL	1200	1.00	1.04	1.00
	LOW	1050	0.98	1.01	0.99
	HIGH	1350	1.02	1.07	1.01
4TXCC043AC3+TUD1B080A9H3	NOMINAL	1200	1.01	1.05	1.00
	LOW	1050	0.99	1.02	0.99
	HIGH	1350	1.03	1.08	1.01
4TXCC043AC3+TUD1B100A9H3	NOMINAL	1200	1.01	1.04	1.00
	LOW	1050	0.99	1.01	0.99
	HIGH	1350	1.03	1.07	1.01
4TXCC043AC3+TUD1C080A9H4	NOMINAL	1200	1.01	1.05	1.00
	LOW	1050	0.99	1.02	0.99
	HIGH	1350	1.03	1.08	1.01
4TXCC043AC3+TUX1B060A9H3	NOMINAL	1200	1.01	1.04	0.99
	LOW	1050	0.99	1.01	0.98
	HIGH	1350	1.03	1.07	1.00
4TXCC043AC3+TUX1B080A9H3	NOMINAL	1200	1.01	1.04	0.99
	LOW	1050	0.99	1.01	0.98
	HIGH	1350	1.03	1.07	1.00
4TXCC043AC3+TUX1C100A9H4	NOMINAL	1200	1.01	1.05	1.00
	LOW	1050	0.99	1.02	0.99
	HIGH	1350	1.03	1.08	1.01
4TXCC043AC3+TUY060R9V3	NOMINAL	1200	1.01	1.03	0.98
	LOW	1050	0.99	1.00	0.97
	HIGH	1350	1.03	1.06	0.99

Performance Data
Cooling

4TWB3036A1

CORRECTION FACTORS FOR OTHER COMBINATIONS (MULTIPLY DATA BY FACTOR)

INDOOR MODEL		CFM	MBTUH TOT	MBTUH SEN	SYST KW
4TXCC043AC3+TUY080R9V3	NOMINAL	1200	1.01	1.03	0.98
	LOW	1050	0.99	1.00	0.97
	HIGH	1350	1.03	1.06	0.99
4TXCC043AC3+TUY100R9V4	NOMINAL	1200	1.01	1.04	0.98
	LOW	1050	0.99	1.00	0.97
	HIGH	1350	1.03	1.07	0.99
4TXFH033AS3+TDD060R9V3	NOMINAL	1200	1.01	0.99	0.98
	LOW	1050	0.99	0.96	0.97
	HIGH	1350	1.03	1.02	0.99
4TXFH033AS3+TDD080R9V3	NOMINAL	1200	1.01	0.99	0.98
	LOW	1050	0.99	0.96	0.97
	HIGH	1350	1.03	1.02	0.99
4TXFH033AS3+TDD1B060A9H3	NOMINAL	1200	1.01	1.00	0.99
	LOW	1050	0.99	0.97	0.98
	HIGH	1350	1.03	1.03	1.00
4TXFH033AS3+TDD1B080A9H3	NOMINAL	1200	1.01	1.00	0.99
	LOW	1050	0.99	0.97	0.98
	HIGH	1350	1.03	1.03	1.00
4TXFH033AS3+TDX1B060A9H3	NOMINAL	1200	1.01	0.99	0.99
	LOW	1050	0.99	0.96	0.98
	HIGH	1350	1.03	1.02	1.00
4TXFH033AS3+TDX1B080A9H3	NOMINAL	1200	1.01	0.99	0.98
	LOW	1050	0.99	0.96	0.97
	HIGH	1350	1.03	1.02	0.99
4TXFH033AS3+TDX1C100A9H4	NOMINAL	1200	1.01	1.00	0.99
	LOW	1050	0.99	0.97	0.98
	HIGH	1350	1.03	1.03	1.00
4TXFH033AS3+TDY060R9V3	NOMINAL	1200	1.01	0.98	0.98
	LOW	1050	0.99	0.95	0.97
	HIGH	1350	1.03	1.01	0.99
4TXFH033AS3+TDY080R9V3	NOMINAL	1200	1.00	0.98	0.98
	LOW	1050	0.98	0.95	0.97
	HIGH	1350	1.02	1.01	0.99
4TXFH033AS3+TDY100R9V4	NOMINAL	1200	1.01	0.99	0.98
	LOW	1050	0.99	0.96	0.97
	HIGH	1350	1.03	1.02	0.99
4TXFH033AS3+TUD060R9V3	NOMINAL	1200	1.01	0.98	0.98
	LOW	1050	0.99	0.95	0.97
	HIGH	1350	1.03	1.01	0.99
4TXFH033AS3+TUD080R9V3	NOMINAL	1200	1.01	0.98	0.98
	LOW	1050	0.99	0.95	0.97
	HIGH	1350	1.03	1.01	0.99
4TXFH033AS3+TUD080R9V4	NOMINAL	1200	1.02	1.00	0.99
	LOW	1050	1.00	0.97	0.98
	HIGH	1350	1.04	1.03	1.00
4TXFH033AS3+TUD100R9V3	NOMINAL	1200	1.01	0.99	0.99
	LOW	1050	0.99	0.96	0.98
	HIGH	1350	1.03	1.02	1.00
4TXFH033AS3+TUD1B060A9H3	NOMINAL	1200	1.02	1.00	1.00
	LOW	1050	1.00	0.97	0.99
	HIGH	1350	1.04	1.03	1.01
4TXFH033AS3+TUD1B080A9H3	NOMINAL	1200	1.02	1.00	1.00
	LOW	1050	1.00	0.97	0.99
	HIGH	1350	1.04	1.03	1.01
4TXFH033AS3+TUD1B100A9H3	NOMINAL	1200	1.01	1.00	0.99
	LOW	1050	0.99	0.97	0.98
	HIGH	1350	1.03	1.03	1.00
4TXFH033AS3+TUD1C080A9H4	NOMINAL	1200	1.02	1.00	0.99
	LOW	1050	1.00	0.97	0.98
	HIGH	1350	1.04	1.03	1.00
4TXFH033AS3+TUX1B060A9H3	NOMINAL	1200	1.01	0.99	0.99
	LOW	1050	0.99	0.96	0.98
	HIGH	1350	1.03	1.02	1.00

CORRECTION FACTORS FOR OTHER COMBINATIONS (MULTIPLY DATA BY FACTOR)

INDOOR MODEL		CFM	MBTUH TOT	MBTUH SEN	SYST KW
4TXFH033AS3+TUX1B080A9H3	NOMINAL	1200	1.01	1.00	0.99
	LOW	1050	0.99	0.97	0.98
	HIGH	1350	1.03	1.03	1.00
4TXFH033AS3+TUX1C100A9H4	NOMINAL	1200	1.02	1.00	1.00
	LOW	1050	1.00	0.97	0.99
	HIGH	1350	1.04	1.03	1.01
4TXFH033AS3+TUY060R9V3	NOMINAL	1200	1.01	0.98	0.98
	LOW	1050	0.99	0.95	0.97
	HIGH	1350	1.03	1.01	0.99
4TXFH033AS3+TUY080R9V3	NOMINAL	1200	1.01	0.99	0.98
	LOW	1050	0.99	0.96	0.97
	HIGH	1350	1.03	1.02	0.99
4TXFH033AS3+TUY100R9V4	NOMINAL	1200	1.01	0.99	0.98
	LOW	1050	0.99	0.96	0.97
	HIGH	1350	1.03	1.02	0.99
4TXFH041AS3	NOMINAL	1200	1.02	1.02	1.01
	LOW	1050	1.00	0.99	1.00
	HIGH	1350	1.04	1.05	1.02
4TXFH041AS3+TDD060R9V3	NOMINAL	1200	1.04	1.05	1.01
	LOW	1050	1.02	1.02	1.00
	HIGH	1350	1.06	1.08	1.02
4TXFH041AS3+TDD080R9V3	NOMINAL	1200	1.04	1.04	1.01
	LOW	1050	1.02	1.01	1.00
	HIGH	1350	1.06	1.07	1.02
4TXFH041AS3+TDD1B060A9H3	NOMINAL	1200	1.03	1.04	1.02
	LOW	1050	1.01	1.01	1.01
	HIGH	1350	1.05	1.07	1.03
4TXFH041AS3+TDD1B080A9H3	NOMINAL	1200	1.03	1.04	1.02
	LOW	1050	1.01	1.01	1.01
	HIGH	1350	1.05	1.07	1.03
4TXFH041AS3+TDX1B060A9H3	NOMINAL	1200	1.03	1.04	1.02
	LOW	1050	1.01	1.01	1.01
	HIGH	1350	1.05	1.07	1.03
4TXFH041AS3+TDX1B080A9H3	NOMINAL	1200	1.03	1.04	1.02
	LOW	1050	1.01	1.01	1.01
	HIGH	1350	1.05	1.07	1.03
4TXFH041AS3+TDX1C100A9H4	NOMINAL	1200	1.04	1.05	1.03
	LOW	1050	1.02	1.02	1.02
	HIGH	1350	1.06	1.09	1.04
4TXFH041AS3+TDY060R9V3	NOMINAL	1200	1.04	1.04	1.01
	LOW	1050	1.01	1.01	1.00
	HIGH	1350	1.06	1.07	1.02
4TXFH041AS3+TDY080R9V3	NOMINAL	1200	1.03	1.03	1.01
	LOW	1050	1.01	1.00	1.00
	HIGH	1350	1.05	1.06	1.02
4TXFH041AS3+TDY100R9V4	NOMINAL	1200	1.04	1.04	1.01
	LOW	1050	1.01	1.01	1.00
	HIGH	1350	1.06	1.07	1.02
4TXFH041AS3+TUD060R9V3	NOMINAL	1200	1.04	1.04	1.01
	LOW	1050	1.01	1.01	1.00
	HIGH	1350	1.06	1.07	1.02
4TXFH041AS3+TUD080R9V3	NOMINAL	1200	1.04	1.04	1.01
	LOW	1050	1.02	1.01	1.00
	HIGH	1350	1.06	1.07	1.02
4TXFH041AS3+TUD080R9V4	NOMINAL	1200	1.04	1.05	1.01
	LOW	1050	1.02	1.02	1.00
	HIGH	1350	1.06	1.08	1.02
4TXFH041AS3+TUD100R9V3	NOMINAL	1200	1.03	1.04	1.01
	LOW	1050	1.01	1.01	1.00
	HIGH	1350	1.05	1.07	1.02
4TXFH041AS3+TUD1B060A9H3	NOMINAL	1200	1.04	1.05	1.02
	LOW	1050	1.02	1.02	1.01
	HIGH	1350	1.06	1.09	1.03

Performance Data
Cooling

4TWB3036A1

CORRECTION FACTORS FOR OTHER COMBINATIONS (MULTIPLY DATA BY FACTOR)

INDOOR MODEL		CFM	MBTUH TOT	MBTUH SEN	SYST KW
4TXFH041AS3+TUD1B080A9H3	NOMINAL	1200	1.04	1.05	1.03
	LOW	1050	1.02	1.02	1.02
	HIGH	1350	1.06	1.09	1.04
4TXFH041AS3+TUD1B100A9H3	NOMINAL	1200	1.04	1.05	1.02
	LOW	1050	1.02	1.02	1.01
	HIGH	1350	1.06	1.08	1.03
4TXFH041AS3+TUD1C080A9H4	NOMINAL	1200	1.04	1.06	1.04
	LOW	1050	1.02	1.03	1.02
	HIGH	1350	1.06	1.09	1.05
4TXFH041AS3+TUX1B060A9H3	NOMINAL	1200	1.03	1.04	1.02
	LOW	1050	1.01	1.01	1.01
	HIGH	1350	1.05	1.07	1.03
4TXFH041AS3+TUX1B080A9H3	NOMINAL	1200	1.03	1.05	1.02
	LOW	1050	1.01	1.02	1.01
	HIGH	1350	1.05	1.08	1.03
4TXFH041AS3+TUX1C100A9H4	NOMINAL	1200	1.04	1.05	1.03
	LOW	1050	1.02	1.02	1.02
	HIGH	1350	1.06	1.09	1.04
4TXFH041AS3+TUY060R9V3	NOMINAL	1200	1.04	1.04	1.01
	LOW	1050	1.01	1.01	1.00
	HIGH	1350	1.06	1.07	1.02
4TXFH041AS3+TUY080R9V3	NOMINAL	1200	1.04	1.04	1.01
	LOW	1050	1.01	1.01	1.00
	HIGH	1350	1.06	1.07	1.02
4TXFH041AS3+TUY100R9V4	NOMINAL	1200	1.04	1.04	1.01
	LOW	1050	1.02	1.01	1.00
	HIGH	1350	1.06	1.07	1.02
RXC031S3	NOMINAL	1200	1.02	1.00	1.02
	LOW	1050	1.00	0.97	1.01
	HIGH	1350	1.04	1.03	1.03
RXC031S3+TDD060R9V3	NOMINAL	1200	1.02	1.01	1.01
	LOW	1050	1.00	0.98	1.00
	HIGH	1350	1.04	1.04	1.02
RXC031S3+TDD080R9V3	NOMINAL	1200	1.03	1.02	1.01
	LOW	1050	1.01	0.99	1.00
	HIGH	1350	1.05	1.05	1.02
RXC031S3+TDD1B060A9H3	NOMINAL	1200	1.03	1.02	1.01
	LOW	1050	1.01	0.99	1.00
	HIGH	1350	1.05	1.05	1.02
RXC031S3+TDD1B080A9H3	NOMINAL	1200	1.03	1.02	1.01
	LOW	1050	1.01	0.99	1.00
	HIGH	1350	1.05	1.05	1.02
RXC031S3+TDX1B040A9H2	NOMINAL	1200	1.03	1.02	1.00
	LOW	1050	1.01	0.99	0.99
	HIGH	1350	1.05	1.05	1.01
RXC031S3+TDX1B060A9H3	NOMINAL	1200	1.03	1.02	1.01
	LOW	1050	1.01	0.99	1.00
	HIGH	1350	1.05	1.05	1.02
RXC031S3+TDX1B080A9H3	NOMINAL	1200	1.02	1.02	1.01
	LOW	1050	1.00	0.99	1.00
	HIGH	1350	1.04	1.05	1.02
RXC031S3+TDY060R9V3	NOMINAL	1200	1.02	1.02	1.00
	LOW	1050	1.00	0.99	0.99
	HIGH	1350	1.05	1.05	1.01
RXC031S3+TDY080R9V3	NOMINAL	1200	1.02	1.01	1.00
	LOW	1050	1.00	0.98	0.99
	HIGH	1350	1.04	1.04	1.01
RXC031S3+TUD060R9V3	NOMINAL	1200	1.02	1.01	1.00
	LOW	1050	1.00	0.98	0.99
	HIGH	1350	1.04	1.04	1.01
RXC031S3+TUD080R9V3	NOMINAL	1200	1.02	1.01	1.00
	LOW	1050	1.00	0.98	0.99
	HIGH	1350	1.04	1.04	1.01

CORRECTION FACTORS FOR OTHER COMBINATIONS (MULTIPLY DATA BY FACTOR)

INDOOR MODEL		CFM	MBTUH TOT	MBTUH SEN	SYST KW
RXC031S3+TUD1A040A9H2	NOMINAL	1200	1.03	1.02	1.00
	LOW	1050	1.01	0.99	0.99
	HIGH	1350	1.05	1.05	1.01
RXC031S3+TUD1B060A9H3	NOMINAL	1200	1.03	1.02	1.01
	LOW	1050	1.01	0.99	1.00
	HIGH	1350	1.05	1.05	1.02
RXC031S3+TUD1B080A9H3	NOMINAL	1200	1.04	1.03	1.01
	LOW	1050	1.01	1.00	1.00
	HIGH	1350	1.06	1.06	1.02
RXC031S3+TUX1B040A9H2	NOMINAL	1200	1.03	1.02	1.00
	LOW	1050	1.01	0.99	0.99
	HIGH	1350	1.05	1.05	1.01
RXC031S3+TUX1B060A9H3	NOMINAL	1200	1.03	1.02	1.01
	LOW	1050	1.01	0.99	1.00
	HIGH	1350	1.05	1.05	1.02
RXC031S3+TUX1B080A9H3	NOMINAL	1200	1.03	1.02	1.01
	LOW	1050	1.01	0.99	1.00
	HIGH	1350	1.05	1.05	1.02
RXC031S3+TUY060R9V3	NOMINAL	1200	1.03	1.02	1.00
	LOW	1050	1.01	0.99	0.99
	HIGH	1350	1.05	1.05	1.01
RXC031S3+TUY080R9V3	NOMINAL	1200	1.03	1.02	1.00
	LOW	1050	1.01	0.99	0.99
	HIGH	1350	1.05	1.05	1.01
TWE036C14+4AYTXVH-3	NOMINAL	1200	1.01	0.97	1.01
	LOW	1050	0.99	0.94	1.00
	HIGH	1350	1.03	1.00	1.02
TWE048C14+4AYTXVH-3	NOMINAL	1200	1.03	1.03	1.04
	LOW	1050	1.01	1.00	1.03
	HIGH	1350	1.05	1.06	1.05
TXA036C4+4AYTXVH-3	NOMINAL	1200	1.00	1.00	1.01
	LOW	1050	0.98	0.97	1.00
	HIGH	1350	1.02	1.03	1.02
TXC036C4+4AYTXVH-3	NOMINAL	1200	1.00	1.00	1.01
	LOW	1050	0.98	0.97	1.00
	HIGH	1350	1.02	1.03	1.02
TXH033A4+4AYTXVH-3+TDD060R9V3	NOMINAL	1200	1.00	0.99	0.99
	LOW	1050	0.98	0.96	0.98
	HIGH	1350	1.02	1.02	1.00
TXH033A4+4AYTXVH-3+TDD080R9V3	NOMINAL	1200	1.01	0.99	0.99
	LOW	1050	0.99	0.96	0.98
	HIGH	1350	1.03	1.02	1.00
TXH033A4+4AYTXVH-3+TDD100R9V5	NOMINAL	1200	1.02	1.00	0.99
	LOW	1050	1.00	0.97	0.98
	HIGH	1350	1.04	1.03	1.00
TXH033A4+4AYTXVH-3+TDD1B060A9H3	NOMINAL	1200	1.01	1.00	0.99
	LOW	1050	0.99	0.97	0.98
	HIGH	1350	1.03	1.03	1.00
TXH033A4+4AYTXVH-3+TDD1B080A9H3	NOMINAL	1200	1.01	1.00	0.99
	LOW	1050	0.99	0.97	0.98
	HIGH	1350	1.03	1.03	1.00
TXH033A4+4AYTXVH-3+TDX1B040A9H2	NOMINAL	1200	1.01	0.99	0.99
	LOW	1050	0.99	0.96	0.98
	HIGH	1350	1.03	1.02	1.00
TXH033A4+4AYTXVH-3+TDX1B060A9H3	NOMINAL	1200	1.01	0.99	0.99
	LOW	1050	0.99	0.96	0.98
	HIGH	1350	1.03	1.02	1.00
TXH033A4+4AYTXVH-3+TDX1B080A9H3	NOMINAL	1200	1.01	0.99	0.98
	LOW	1050	0.99	0.96	0.97
	HIGH	1350	1.03	1.02	0.99
TXH033A4+4AYTXVH-3+TDX1C100A9H4	NOMINAL	1200	1.01	1.00	0.99
	LOW	1050	0.99	0.97	0.98
	HIGH	1350	1.03	1.03	1.00

Performance Data
Cooling

4TWB3036A1

CORRECTION FACTORS FOR OTHER COMBINATIONS (MULTIPLY DATA BY FACTOR)

INDOOR MODEL		CFM	MBTUH TOT	MBTUH SEN	SYST KW
TXH033A4+4AYTXVH-3+TDY060R9V3	NOMINAL	1200	1.01	0.98	0.98
	LOW	1050	0.99	0.95	0.97
	HIGH	1350	1.03	1.01	0.99
TXH033A4+4AYTXVH-3+TDY080R9V3	NOMINAL	1200	1.00	0.98	0.98
	LOW	1050	0.98	0.95	0.97
	HIGH	1350	1.02	1.01	0.99
TXH033A4+4AYTXVH-3+TDY100R9V4	NOMINAL	1200	1.01	0.99	0.98
	LOW	1050	0.99	0.96	0.97
	HIGH	1350	1.03	1.02	0.99
TXH033A4+4AYTXVH-3+TUD060R9V3	NOMINAL	1200	1.00	0.98	0.99
	LOW	1050	0.98	0.95	0.98
	HIGH	1350	1.02	1.01	1.00
TXH033A4+4AYTXVH-3+TUD080R9V3	NOMINAL	1200	1.00	0.99	0.99
	LOW	1050	0.98	0.96	0.98
	HIGH	1350	1.02	1.02	1.00
TXH033A4+4AYTXVH-3+TUD100R9V5	NOMINAL	1200	1.02	1.00	0.99
	LOW	1050	1.00	0.97	0.98
	HIGH	1350	1.04	1.03	1.00
TXH033A4+4AYTXVH-3+TUD1A040A9H2	NOMINAL	1200	1.01	0.99	0.99
	LOW	1050	0.99	0.96	0.98
	HIGH	1350	1.03	1.02	1.00
TXH033A4+4AYTXVH-3+TUD1B060A9H3	NOMINAL	1200	1.02	1.00	1.00
	LOW	1050	1.00	0.97	0.99
	HIGH	1350	1.04	1.03	1.01
TXH033A4+4AYTXVH-3+TUD1B080A9H3	NOMINAL	1200	1.02	1.00	1.00
	LOW	1050	1.00	0.97	0.99
	HIGH	1350	1.04	1.03	1.01
TXH033A4+4AYTXVH-3+TUX1B040A9H2	NOMINAL	1200	1.01	0.99	0.99
	LOW	1050	0.99	0.96	0.98
	HIGH	1350	1.03	1.02	1.00
TXH033A4+4AYTXVH-3+TUX1B060A9H3	NOMINAL	1200	1.01	0.99	0.99
	LOW	1050	0.99	0.96	0.98
	HIGH	1350	1.03	1.02	1.00
TXH033A4+4AYTXVH-3+TUX1B080A9H3	NOMINAL	1200	1.01	1.00	0.99
	LOW	1050	0.99	0.97	0.98
	HIGH	1350	1.03	1.03	1.00
TXH033A4+4AYTXVH-3+TUX1C100A9H4	NOMINAL	1200	1.02	1.00	1.00
	LOW	1050	1.00	0.97	0.99
	HIGH	1350	1.04	1.03	1.01
TXH033A4+4AYTXVH-3+TUY060R9V3	NOMINAL	1200	1.01	0.98	0.98
	LOW	1050	0.99	0.95	0.97
	HIGH	1350	1.03	1.01	0.99
TXH033A4+4AYTXVH-3+TUY080R9V3	NOMINAL	1200	1.01	0.99	0.98
	LOW	1050	0.99	0.96	0.97
	HIGH	1350	1.03	1.02	0.99
TXH033A4+4AYTXVH-3+TUY100R9V4	NOMINAL	1200	1.01	0.99	0.98
	LOW	1050	0.99	0.96	0.97
	HIGH	1350	1.03	1.02	0.99
TXH041A4+4AYTXVH-3	NOMINAL	1200	1.01	1.02	1.02
	LOW	1050	0.99	0.99	1.01
	HIGH	1350	1.03	1.05	1.03
TXH041A4+4AYTXVH-3+TDD060R9V3	NOMINAL	1200	1.03	1.04	1.02
	LOW	1050	1.01	1.01	1.01
	HIGH	1350	1.05	1.07	1.03
TXH041A4+4AYTXVH-3+TDD080R9V3	NOMINAL	1200	1.04	1.04	1.02
	LOW	1050	1.01	1.01	1.01
	HIGH	1350	1.06	1.07	1.03
TXH041A4+4AYTXVH-3+TDD100R9V5	NOMINAL	1200	1.05	1.05	1.02
	LOW	1050	1.03	1.02	1.01
	HIGH	1350	1.07	1.08	1.03
TXH041A4+4AYTXVH-3+TDD1B060A9H3	NOMINAL	1200	1.03	1.04	1.02
	LOW	1050	1.01	1.01	1.01
	HIGH	1350	1.05	1.07	1.03

CORRECTION FACTORS FOR OTHER COMBINATIONS (MULTIPLY DATA BY FACTOR)

INDOOR MODEL		CFM	MBTUH TOT	MBTUH SEN	SYST KW
TXH041A4+4AYTXVH-3+TDD1B080A9H3	NOMINAL	1200	1.03	1.04	1.02
	LOW	1050	1.01	1.01	1.01
	HIGH	1350	1.05	1.07	1.03
TXH041A4+4AYTXVH-3+TDX1B040A9H2	NOMINAL	1200	1.04	1.04	1.01
	LOW	1050	1.01	1.01	1.00
	HIGH	1350	1.06	1.07	1.02
TXH041A4+4AYTXVH-3+TDX1B060A9H3	NOMINAL	1200	1.03	1.04	1.02
	LOW	1050	1.01	1.01	1.01
	HIGH	1350	1.05	1.07	1.03
TXH041A4+4AYTXVH-3+TDX1B080A9H3	NOMINAL	1200	1.03	1.04	1.02
	LOW	1050	1.01	1.01	1.01
	HIGH	1350	1.05	1.07	1.03
TXH041A4+4AYTXVH-3+TDX1C100A9H4	NOMINAL	1200	1.04	1.05	1.03
	LOW	1050	1.02	1.02	1.02
	HIGH	1350	1.06	1.09	1.04
TXH041A4+4AYTXVH-3+TDY060R9V3	NOMINAL	1200	1.04	1.04	1.01
	LOW	1050	1.01	1.01	1.00
	HIGH	1350	1.06	1.07	1.02
TXH041A4+4AYTXVH-3+TDY080R9V3	NOMINAL	1200	1.03	1.03	1.01
	LOW	1050	1.01	1.00	1.00
	HIGH	1350	1.05	1.06	1.02
TXH041A4+4AYTXVH-3+TDY100R9V4	NOMINAL	1200	1.04	1.04	1.01
	LOW	1050	1.01	1.01	1.00
	HIGH	1350	1.06	1.07	1.02
TXH041A4+4AYTXVH-3+TUD060R9V3	NOMINAL	1200	1.02	1.04	1.01
	LOW	1050	1.00	1.00	1.00
	HIGH	1350	1.05	1.07	1.02
TXH041A4+4AYTXVH-3+TUD080R9V3	NOMINAL	1200	1.02	1.04	1.01
	LOW	1050	1.00	1.00	1.00
	HIGH	1350	1.05	1.07	1.02
TXH041A4+4AYTXVH-3+TUD100R9V5	NOMINAL	1200	1.04	1.05	1.02
	LOW	1050	1.02	1.02	1.01
	HIGH	1350	1.06	1.08	1.03
TXH041A4+4AYTXVH-3+TUD1A040A9H2	NOMINAL	1200	1.04	1.05	1.02
	LOW	1050	1.02	1.02	1.01
	HIGH	1350	1.06	1.08	1.03
TXH041A4+4AYTXVH-3+TUD1B060A9H3	NOMINAL	1200	1.04	1.05	1.02
	LOW	1050	1.02	1.02	1.01
	HIGH	1350	1.06	1.09	1.03
TXH041A4+4AYTXVH-3+TUD1B080A9H3	NOMINAL	1200	1.04	1.05	1.03
	LOW	1050	1.02	1.02	1.02
	HIGH	1350	1.06	1.09	1.04
TXH041A4+4AYTXVH-3+TUX1B040A9H2	NOMINAL	1200	1.03	1.04	1.01
	LOW	1050	1.01	1.01	1.00
	HIGH	1350	1.05	1.07	1.02
TXH041A4+4AYTXVH-3+TUX1B060A9H3	NOMINAL	1200	1.03	1.04	1.02
	LOW	1050	1.01	1.01	1.01
	HIGH	1350	1.05	1.07	1.03
TXH041A4+4AYTXVH-3+TUX1B080A9H3	NOMINAL	1200	1.03	1.05	1.02
	LOW	1050	1.01	1.02	1.01
	HIGH	1350	1.05	1.08	1.03
TXH041A4+4AYTXVH-3+TUX1C100A9H4	NOMINAL	1200	1.04	1.05	1.03
	LOW	1050	1.02	1.02	1.02
	HIGH	1350	1.06	1.09	1.04
TXH041A4+4AYTXVH-3+TUY060R9V3	NOMINAL	1200	1.04	1.04	1.01
	LOW	1050	1.01	1.01	1.00
	HIGH	1350	1.06	1.07	1.02
TXH041A4+4AYTXVH-3+TUY080R9V3	NOMINAL	1200	1.04	1.04	1.01
	LOW	1050	1.01	1.01	1.00
	HIGH	1350	1.06	1.07	1.02
TXH041A4+4AYTXVH-3+TUY100R9V4	NOMINAL	1200	1.04	1.04	1.01
	LOW	1050	1.02	1.01	1.00
	HIGH	1350	1.06	1.07	1.02

Performance Data
Cooling

4TWB3042A1

4TWB3042A1 WITH 4TEC3F42A1 AT 1400 CFM

O.D. D.B.	I.D. W.B.	TOT. CAP.	SENS. CAP. AT ENTERING D.B. TEMP. 72	75	78	80	TOTAL KW
85	59	38.1	31.0	34.9	38.1	38.1	3.26
	63	39.8	25.2	29.0	32.9	35.5	3.28
	67	42.9	19.8	23.6	27.5	30.1	3.33
	71	46.3	14.4	18.3	22.1	24.7	3.36
95	59	36.0	30.1	33.9	36.0	36.0	3.60
	63	37.6	24.3	28.1	32.0	34.6	3.62
	67	40.5	18.9	22.8	26.6	29.2	3.68
	71	43.7	13.5	17.4	21.3	23.8	3.72
105	59	35.0	29.6	33.5	35.0	35.0	3.77
	63	36.5	23.8	27.7	31.5	34.1	3.79
	67	39.3	18.5	22.3	26.2	28.8	3.86
	71	42.5	13.1	16.9	20.8	23.4	3.89
115	59	31.9	28.2	31.9	31.9	31.9	4.28
	63	33.2	22.5	26.4	30.2	32.8	4.31
	67	35.8	17.2	21.1	24.9	27.5	4.38
	71	38.6	11.8	15.7	19.5	22.1	4.42

CORRECTION FACTORS FOR OTHER AIRFLOWS (MULTIPLY DATA BY FACTOR)

	AIRFLOW	TOTAL CAPACITY	SENSIBLE CAPACITY
LOW	1225	0.98	0.98
HIGH	1575	1.02	1.02

NOTE: ALL TABLES ABOVE ARE AT ARI RATING CONDITIONS RATED WITH 25 FEET OF REFRIGERANT LINES.
* DRY COIL CONDITION (TOTAL CAPACITY = SENSIBLE CAPACITY)
TOTAL CAPACITY, COMP. KW AND APP. DEW PT. ARE VALID ONLY FOR WET COIL. ALL TEMPERATURES IN DEGREES F.

CORRECTION FACTORS FOR OTHER COMBINATIONS (MULTIPLY DATA BY FACTOR)

INDOOR MODEL		CFM	MBTUH TOT	MBTUH SEN	SYST KW
2TEH3F42A1+4AYTXVH-3	NOMINAL	1400	1.03	1.03	1.00
	LOW	1225	1.01	1.00	0.99
	HIGH	1575	1.06	1.06	1.01
2TGB3F42A1+4AYTXVH-3	NOMINAL	1400	1.01	0.99	1.00
	LOW	1225	0.99	0.96	0.99
	HIGH	1575	1.03	1.02	1.01
4TEE3F37A1	NOMINAL	1400	0.98	0.97	0.96
	LOW	1225	0.96	0.94	0.95
	HIGH	1575	1.00	1.00	0.97
4TEE3F40A1	NOMINAL	1400	1.03	1.04	1.00
	LOW	1225	1.01	1.01	0.99
	HIGH	1575	1.05	1.07	1.01
4TEP3F42A1	NOMINAL	1400	0.99	1.00	0.99
	LOW	1225	0.97	0.97	0.98
	HIGH	1575	1.01	1.03	1.00
4TXCB036AS3	NOMINAL	1400	1.00	1.01	0.99
	LOW	1225	0.98	0.98	0.98
	HIGH	1575	1.02	1.04	1.00
4TXCB036AS3+TDD080R9V3	NOMINAL	1400	1.00	1.01	0.97
	LOW	1225	0.98	0.98	0.96
	HIGH	1575	1.02	1.04	0.98
4TXCB036AS3+TDD1B080A9H3	NOMINAL	1400	1.01	1.03	0.98
	LOW	1225	0.99	1.00	0.98
	HIGH	1575	1.03	1.06	0.99
4TXCB036AS3+TUD080R9V3	NOMINAL	1400	1.00	1.02	1.00
	LOW	1225	0.98	0.99	0.99
	HIGH	1575	1.02	1.05	1.01
4TXCB036AS3+TUD1B080A9H3	NOMINAL	1400	1.01	1.03	0.98
	LOW	1225	0.99	1.00	0.98
	HIGH	1575	1.03	1.06	0.99
4TXCB036AS3+TUX1B080A9H3	NOMINAL	1400	1.01	1.02	0.98
	LOW	1225	0.99	0.99	0.97
	HIGH	1575	1.03	1.05	0.99

CORRECTION FACTORS FOR OTHER COMBINATIONS (MULTIPLY DATA BY FACTOR)

INDOOR MODEL		CFM	MBTUH TOT	MBTUH SEN	SYST KW
4TXCB036AS3+TUY080R9V3	NOMINAL	1400	1.01	1.03	0.98
	LOW	1225	0.99	1.00	0.97
	HIGH	1575	1.03	1.06	0.99
4TXCB042AC3+TDD100R9V5	NOMINAL	1400	0.98	1.00	0.94
	LOW	1225	0.96	0.97	0.93
	HIGH	1575	1.00	1.03	0.95
4TXCB042AC3+TDD120R9V5	NOMINAL	1400	0.98	1.01	0.94
	LOW	1225	0.96	0.98	0.93
	HIGH	1575	1.00	1.04	0.95
4TXCB042AC3+TDY100R9V4	NOMINAL	1400	0.96	0.99	0.94
	LOW	1225	0.94	0.96	0.93
	HIGH	1575	0.98	1.02	0.95
4TXCB042AC3+TDY120R9V5	NOMINAL	1400	0.98	1.00	0.95
	LOW	1225	0.96	0.97	0.95
	HIGH	1575	1.00	1.03	0.96
4TXCB042AC3+TUD080R9V4	NOMINAL	1400	0.98	1.00	0.94
	LOW	1225	0.96	0.97	0.93
	HIGH	1575	1.00	1.03	0.95
4TXCB042AC3+TUD120R9V5	NOMINAL	1400	0.97	1.00	0.93
	LOW	1225	0.95	0.97	0.92
	HIGH	1575	0.99	1.03	0.94
4TXCB042AC3+TUD1C080A9H4	NOMINAL	1400	0.97	1.00	0.94
	LOW	1225	0.95	0.97	0.93
	HIGH	1575	0.99	1.03	0.95
4TXCB042AC3+TUX1C100A9H4	NOMINAL	1400	0.97	1.00	0.94
	LOW	1225	0.95	0.97	0.93
	HIGH	1575	0.99	1.03	0.95
4TXCB042AC3+TUY100R9V4	NOMINAL	1400	0.97	1.00	0.95
	LOW	1225	0.95	0.97	0.95
	HIGH	1575	0.99	1.03	0.96
4TXCB042AC3+TUY120R9V5	NOMINAL	1400	0.97	1.00	0.95
	LOW	1225	0.95	0.97	0.95
	HIGH	1575	0.99	1.03	0.96
4TXCC037AS3	NOMINAL	1400	1.01	1.02	1.02
	LOW	1225	0.99	0.99	1.00
	HIGH	1575	1.03	1.05	1.03
4TXCC037AS3+TDD100R9V5	NOMINAL	1400	1.02	1.04	1.01
	LOW	1225	1.00	1.01	1.00
	HIGH	1575	1.04	1.07	1.02
4TXCC037AS3+TDD1C100A9H5	NOMINAL	1400	1.02	1.04	1.01
	LOW	1225	1.00	1.01	1.00
	HIGH	1575	1.04	1.07	1.02
4TXCC037AS3+TDX1C100A9H4	NOMINAL	1400	1.03	1.05	1.01
	LOW	1225	1.01	1.02	1.00
	HIGH	1575	1.06	1.08	1.02
4TXCC037AS3+TDY100R9V4	NOMINAL	1400	1.02	1.03	0.99
	LOW	1225	1.00	1.00	0.98
	HIGH	1575	1.04	1.06	1.00
4TXCC037AS3+TUD100R9V5	NOMINAL	1400	1.02	1.03	1.00
	LOW	1225	1.00	1.00	0.99
	HIGH	1575	1.04	1.06	1.01
4TXCC037AS3+TUX1C100A9H4	NOMINAL	1400	1.02	1.04	1.01
	LOW	1225	1.00	1.01	1.00
	HIGH	1575	1.04	1.07	1.02
4TXCC037AS3+TUY100R9V4	NOMINAL	1400	1.02	1.03	0.99
	LOW	1225	1.00	1.00	0.98
	HIGH	1575	1.04	1.06	1.00
4TXCC043AC3+TDD100R9V5	NOMINAL	1400	0.98	1.01	0.94
	LOW	1225	0.96	0.98	0.93
	HIGH	1575	1.00	1.04	0.95
4TXCC043AC3+TDD120R9V5	NOMINAL	1400	0.98	1.01	0.94
	LOW	1225	0.96	0.98	0.93
	HIGH	1575	1.00	1.04	0.95

Performance Data
Cooling

4TWB3042A1

CORRECTION FACTORS FOR OTHER COMBINATIONS (MULTIPLY DATA BY FACTOR)

INDOOR MODEL		CFM	MBTUH TOT	MBTUH SEN	SYST KW
4TXCC043AC3+TDD1C100A9H5	NOMINAL	1400	0.97	1.01	0.95
	LOW	1225	0.95	0.98	0.95
	HIGH	1575	0.99	1.04	0.96
4TXCC043AC3+TDD1D120A9H5	NOMINAL	1400	0.97	1.01	0.95
	LOW	1225	0.95	0.98	0.95
	HIGH	1575	0.99	1.04	0.96
4TXCC043AC3+TDX1D120A9H5	NOMINAL	1400	0.96	1.00	0.94
	LOW	1225	0.94	0.97	0.93
	HIGH	1575	0.98	1.03	0.95
4TXCC043AC3+TDY100R9V4	NOMINAL	1400	0.97	1.00	0.95
	LOW	1225	0.95	0.97	0.95
	HIGH	1575	0.99	1.03	0.96
4TXCC043AC3+TDY120R9V5	NOMINAL	1400	0.98	1.00	0.95
	LOW	1225	0.96	0.97	0.95
	HIGH	1575	1.00	1.03	0.96
4TXCC043AC3+TUD080R9V4	NOMINAL	1400	0.98	1.00	0.94
	LOW	1225	0.96	0.97	0.93
	HIGH	1575	1.00	1.03	0.95
4TXCC043AC3+TUD100R9V5	NOMINAL	1400	0.98	1.00	0.94
	LOW	1225	0.96	0.97	0.93
	HIGH	1575	1.00	1.03	0.95
4TXCC043AC3+TUD120R9V5	NOMINAL	1400	0.98	1.01	0.95
	LOW	1225	0.96	0.98	0.94
	HIGH	1575	1.00	1.04	0.96
4TXCC043AC3+TUD140R9V5	NOMINAL	1400	0.98	1.01	0.94
	LOW	1225	0.96	0.98	0.93
	HIGH	1575	1.00	1.04	0.95
4TXCC043AC3+TUD1C080A9H4	NOMINAL	1400	0.98	1.01	0.95
	LOW	1225	0.96	0.98	0.95
	HIGH	1575	1.00	1.04	0.96
4TXCC043AC3+TUD1C100A9H5	NOMINAL	1400	0.97	1.00	0.95
	LOW	1225	0.95	0.97	0.94
	HIGH	1575	0.98	1.03	0.96
4TXCC043AC3+TUD1D120A9H5	NOMINAL	1400	0.97	1.01	0.95
	LOW	1225	0.95	0.98	0.94
	HIGH	1575	0.99	1.04	0.96
4TXCC043AC3+TUD1D140A9H5	NOMINAL	1400	0.97	1.01	0.95
	LOW	1225	0.95	0.98	0.94
	HIGH	1575	0.99	1.04	0.96
4TXCC043AC3+TUX1C100A9H4	NOMINAL	1400	0.97	1.01	0.95
	LOW	1225	0.95	0.98	0.95
	HIGH	1575	0.99	1.04	0.96
4TXCC043AC3+TUX1D120A9H5	NOMINAL	1400	0.97	1.00	0.95
	LOW	1225	0.95	0.97	0.94
	HIGH	1575	0.98	1.03	0.96
4TXCC043AC3+TUY100R9V4	NOMINAL	1400	0.97	1.00	0.94
	LOW	1225	0.95	0.97	0.93
	HIGH	1575	0.99	1.03	0.95
4TXCC043AC3+TUY120R9V5	NOMINAL	1400	0.98	1.00	0.94
	LOW	1225	0.96	0.97	0.93
	HIGH	1575	1.00	1.03	0.95
4TXFH041AS3	NOMINAL	1400	1.00	1.00	0.98
	LOW	1225	0.98	0.97	0.97
	HIGH	1575	1.02	1.03	0.99
4TXFH041AS3+TDD100R9V5	NOMINAL	1400	1.01	1.02	0.98
	LOW	1225	0.99	0.99	0.97
	HIGH	1575	1.03	1.05	0.99
4TXFH041AS3+TDD120R9V5	NOMINAL	1400	1.01	1.02	0.98
	LOW	1225	0.99	0.99	0.97
	HIGH	1575	1.03	1.05	0.99
4TXFH041AS3+TDD1C100A9H5	NOMINAL	1400	1.00	1.01	0.98
	LOW	1225	0.98	0.98	0.97
	HIGH	1575	1.02	1.04	0.99

CORRECTION FACTORS FOR OTHER COMBINATIONS (MULTIPLY DATA BY FACTOR)

INDOOR MODEL		CFM	MBTUH TOT	MBTUH SEN	SYST KW
4TXFH041AS3+TDD1D120A9H5	NOMINAL	1400	1.00	1.01	0.98
	LOW	1225	0.98	0.98	0.97
	HIGH	1575	1.02	1.04	0.99
4TXFH041AS3+TDX1C100A9H4	NOMINAL	1400	1.01	1.02	0.98
	LOW	1225	0.99	0.99	0.98
	HIGH	1575	1.03	1.05	0.99
4TXFH041AS3+TDX1D120A9H5	NOMINAL	1400	1.00	1.01	0.98
	LOW	1225	0.98	0.98	0.97
	HIGH	1575	1.02	1.04	0.99
4TXFH041AS3+TDY100R9V4	NOMINAL	1400	1.00	1.00	0.96
	LOW	1225	0.98	0.97	0.95
	HIGH	1575	1.02	1.03	0.97
4TXFH041AS3+TDY120R9V5	NOMINAL	1400	1.00	1.00	0.96
	LOW	1225	0.98	0.97	0.95
	HIGH	1575	1.02	1.03	0.97
4TXFH041AS3+TUD080R9V4	NOMINAL	1400	1.00	1.01	0.96
	LOW	1225	0.98	0.98	0.95
	HIGH	1575	1.02	1.04	0.97
4TXFH041AS3+TUD100R9V5	NOMINAL	1400	1.01	1.02	0.98
	LOW	1225	0.99	0.99	0.97
	HIGH	1575	1.03	1.05	0.99
4TXFH041AS3+TUD120R9V5	NOMINAL	1400	1.01	1.02	0.98
	LOW	1225	0.99	0.99	0.97
	HIGH	1575	1.03	1.05	0.99
4TXFH041AS3+TUD140R9V5	NOMINAL	1400	1.01	1.01	0.96
	LOW	1225	0.99	0.98	0.95
	HIGH	1575	1.03	1.04	0.97
4TXFH041AS3+TUD1C080A9H4	NOMINAL	1400	1.00	1.01	0.98
	LOW	1225	0.98	0.98	0.97
	HIGH	1575	1.02	1.04	0.99
4TXFH041AS3+TUD1C100A9H5	NOMINAL	1400	1.00	1.02	0.99
	LOW	1225	0.98	0.99	0.98
	HIGH	1575	1.02	1.05	1.00
4TXFH041AS3+TUD1D120A9H5	NOMINAL	1400	1.00	1.02	0.99
	LOW	1225	0.98	0.99	0.98
	HIGH	1575	1.02	1.05	1.00
4TXFH041AS3+TUD1D140A9H5	NOMINAL	1400	1.00	1.02	0.99
	LOW	1225	0.98	0.99	0.98
	HIGH	1575	1.02	1.05	1.00
4TXFH041AS3+TUX1C100A9H4	NOMINAL	1400	1.00	1.01	0.98
	LOW	1225	0.98	0.98	0.97
	HIGH	1575	1.02	1.04	0.99
4TXFH041AS3+TUX1D120A9H5	NOMINAL	1400	1.00	1.02	0.99
	LOW	1225	0.98	0.99	0.98
	HIGH	1575	1.02	1.05	1.00
4TXFH041AS3+TUY100R9V4	NOMINAL	1400	1.00	1.00	0.96
	LOW	1225	0.98	0.97	0.95
	HIGH	1575	1.02	1.03	0.97
4TXFH041AS3+TUY120R9V5	NOMINAL	1400	1.00	1.01	0.96
	LOW	1225	0.98	0.98	0.95
	HIGH	1575	1.02	1.04	0.97
RXC036S3	NOMINAL	1400	1.00	1.01	0.99
	LOW	1225	0.98	0.98	0.98
	HIGH	1575	1.02	1.04	1.00
RXC036S3+TDD080R9V3	NOMINAL	1400	1.00	1.01	0.97
	LOW	1225	0.98	0.98	0.96
	HIGH	1575	1.02	1.04	0.98
RXC036S3+TDD1B080A9H3	NOMINAL	1400	1.01	1.03	0.98
	LOW	1225	0.99	1.00	0.98
	HIGH	1575	1.03	1.06	0.99
RXC036S3+TUD080R9V3	NOMINAL	1400	1.00	1.02	1.00
	LOW	1225	0.98	0.99	0.99
	HIGH	1575	1.02	1.05	1.01

Performance Data
Cooling

4TWB3042A1

CORRECTION FACTORS FOR OTHER COMBINATIONS (MULTIPLY DATA BY FACTOR)

INDOOR MODEL		CFM	MBTUH TOT	MBTUH SEN	SYST KW
RXC036S3+TUD1B080A9H3	NOMINAL	1400	1.01	1.03	0.98
	LOW	1225	0.99	1.00	0.98
	HIGH	1575	1.03	1.06	0.99
RXC036S3+TUX1B080A9H3	NOMINAL	1400	1.01	1.02	0.98
	LOW	1225	0.99	0.99	0.97
	HIGH	1575	1.03	1.05	0.99
RXC036S3+TUY080R9V3	NOMINAL	1400	1.01	1.03	0.98
	LOW	1225	0.99	1.00	0.97
	HIGH	1575	1.03	1.06	0.99
RXC037S3	NOMINAL	1400	1.01	1.02	1.02
	LOW	1225	0.99	0.99	1.00
	HIGH	1575	1.03	1.05	1.03
RXC037S3+TDD100R9V5	NOMINAL	1400	1.02	1.04	1.01
	LOW	1225	1.00	1.01	1.00
	HIGH	1575	1.04	1.07	1.02
RXC037S3+TDD1C100A9H5	NOMINAL	1400	1.02	1.04	1.01
	LOW	1225	1.00	1.01	1.00
	HIGH	1575	1.04	1.07	1.02
RXC037S3+TDX1C100A9H4	NOMINAL	1400	1.03	1.05	1.01
	LOW	1225	1.01	1.02	1.00
	HIGH	1575	1.06	1.08	1.02
RXC037S3+TDY100R9V4	NOMINAL	1400	1.02	1.03	0.99
	LOW	1225	1.00	1.00	0.98
	HIGH	1575	1.04	1.06	1.00
RXC037S3+TUD100R9V5	NOMINAL	1400	1.02	1.03	1.00
	LOW	1225	1.00	1.00	0.99
	HIGH	1575	1.04	1.06	1.01
RXC037S3+TUX1C100A9H4	NOMINAL	1400	1.02	1.04	1.01
	LOW	1225	1.00	1.01	1.00
	HIGH	1575	1.04	1.07	1.02
RXC037S3+TUY100R9V4	NOMINAL	1400	1.02	1.03	0.99
	LOW	1225	1.00	1.00	0.98
	HIGH	1575	1.04	1.06	1.00
TWE048C14+4AYTXVH-3	NOMINAL	1400	0.99	1.00	0.99
	LOW	1225	0.97	0.97	0.98
	HIGH	1575	1.01	1.03	1.00
TXA048C4+4AYTXVH-3	NOMINAL	1400	0.98	1.01	0.98
	LOW	1225	0.96	0.98	0.97
	HIGH	1575	1.00	1.04	0.99
TXA050C4+4AYTXVH-3	NOMINAL	1400	0.97	1.00	0.97
	LOW	1225	0.95	0.97	0.96
	HIGH	1575	0.99	1.03	0.98
TXC048C4+4AYTXVH-3	NOMINAL	1400	0.98	1.01	0.98
	LOW	1225	0.96	0.98	0.97
	HIGH	1575	1.00	1.04	0.99
TXC050C4+4AYTXVH-3	NOMINAL	1400	0.97	1.00	0.97
	LOW	1225	0.95	0.97	0.96
	HIGH	1575	0.99	1.03	0.98
TXH041A4+4AYTXVH-3	NOMINAL	1400	0.99	1.00	0.99
	LOW	1225	0.97	0.97	0.98
	HIGH	1575	1.01	1.03	1.00
TXH041A4+4AYTXVH-3+TDD080R9V3	NOMINAL	1400	1.00	1.00	0.97
	LOW	1225	0.98	0.97	0.96
	HIGH	1575	1.02	1.03	0.98
TXH041A4+4AYTXVH-3+TDD100R9V5	NOMINAL	1400	1.00	1.01	0.98
	LOW	1225	0.98	0.98	0.97
	HIGH	1575	1.02	1.04	0.99
TXH041A4+4AYTXVH-3+TDD120R9V5	NOMINAL	1400	1.00	1.01	0.98
	LOW	1225	0.98	0.98	0.97
	HIGH	1575	1.02	1.04	0.99
TXH041A4+4AYTXVH-3+TDD1B080A9H3	NOMINAL	1400	1.00	1.00	0.97
	LOW	1225	0.98	0.97	0.96
	HIGH	1575	1.02	1.03	0.98

CORRECTION FACTORS FOR OTHER COMBINATIONS (MULTIPLY DATA BY FACTOR)

INDOOR MODEL		CFM	MBTUH TOT	MBTUH SEN	SYST KW
TXH041A4+4AYTXVH-3+TDD1C100A9H5	NOMINAL	1400	1.00	1.01	0.98
	LOW	1225	0.98	0.98	0.97
	HIGH	1575	1.02	1.04	0.99
TXH041A4+4AYTXVH-3+TDD1D120A9H5	NOMINAL	1400	1.00	1.01	0.98
	LOW	1225	0.98	0.98	0.97
	HIGH	1575	1.02	1.04	0.99
TXH041A4+4AYTXVH-3+TDX1C100A9H4	NOMINAL	1400	1.01	1.02	0.98
	LOW	1225	0.99	0.99	0.98
	HIGH	1575	1.03	1.05	0.99
TXH041A4+4AYTXVH-3+TDX1D120A9H5	NOMINAL	1400	1.00	1.01	0.98
	LOW	1225	0.98	0.98	0.97
	HIGH	1575	1.02	1.04	0.99
TXH041A4+4AYTXVH-3+TDY100R9V4	NOMINAL	1400	1.00	1.00	0.96
	LOW	1225	0.98	0.97	0.95
	HIGH	1575	1.02	1.03	0.97
TXH041A4+4AYTXVH-3+TDY120R9V5	NOMINAL	1400	1.00	1.00	0.96
	LOW	1225	0.98	0.97	0.95
	HIGH	1575	1.02	1.03	0.97
TXH041A4+4AYTXVH-3+TUD080R9V3	NOMINAL	1400	0.99	1.00	0.98
	LOW	1225	0.97	0.97	0.98
	HIGH	1575	1.01	1.03	0.99
TXH041A4+4AYTXVH-3+TUD100R9V5	NOMINAL	1400	0.99	1.01	0.98
	LOW	1225	0.97	0.98	0.97
	HIGH	1575	1.01	1.04	0.99
TXH041A4+4AYTXVH-3+TUD120R9V5	NOMINAL	1400	1.00	1.01	0.98
	LOW	1225	0.98	0.98	0.97
	HIGH	1575	1.02	1.04	0.99
TXH041A4+4AYTXVH-3+TUD140R9V5	NOMINAL	1400	1.00	1.01	0.98
	LOW	1225	0.98	0.98	0.97
	HIGH	1575	1.02	1.04	0.99
TXH041A4+4AYTXVH-3+TUD1B080A9H3	NOMINAL	1400	1.00	1.02	0.98
	LOW	1225	0.98	0.99	0.97
	HIGH	1575	1.02	1.05	0.99
TXH041A4+4AYTXVH-3+TUD1C100A9H5	NOMINAL	1400	1.00	1.02	0.99
	LOW	1225	0.98	0.99	0.98
	HIGH	1575	1.02	1.05	1.00
TXH041A4+4AYTXVH-3+TUD1D120A9H5	NOMINAL	1400	1.00	1.02	0.99
	LOW	1225	0.98	0.99	0.98
	HIGH	1575	1.02	1.05	1.00
TXH041A4+4AYTXVH-3+TUD1D140A9H5	NOMINAL	1400	1.00	1.02	0.99
	LOW	1225	0.98	0.99	0.98
	HIGH	1575	1.02	1.05	1.00
TXH041A4+4AYTXVH-3+TUX1B080A9H3	NOMINAL	1400	0.99	1.00	0.97
	LOW	1225	0.97	0.97	0.96
	HIGH	1575	1.01	1.03	0.98
TXH041A4+4AYTXVH-3+TUX1C100A9H4	NOMINAL	1400	1.00	1.01	0.98
	LOW	1225	0.98	0.98	0.97
	HIGH	1575	1.02	1.04	0.99
TXH041A4+4AYTXVH-3+TUX1D120A9H5	NOMINAL	1400	1.00	1.02	0.99
	LOW	1225	0.98	0.99	0.98
	HIGH	1575	1.02	1.05	1.00
TXH041A4+4AYTXVH-3+TUY080R9V3	NOMINAL	1400	1.00	1.00	0.96
	LOW	1225	0.98	0.97	0.95
	HIGH	1575	1.02	1.03	0.97
TXH041A4+4AYTXVH-3+TUY100R9V4	NOMINAL	1400	1.00	1.00	0.96
	LOW	1225	0.98	0.97	0.95
	HIGH	1575	1.02	1.03	0.97
TXH041A4+4AYTXVH-3+TUY120R9V5	NOMINAL	1400	1.00	1.01	0.96
	LOW	1225	0.98	0.98	0.95
	HIGH	1575	1.02	1.04	0.97

Performance Data
Cooling

4TWB3048A1

4TWB3048A1 WITH 4TEC3F48A1 AT 1600 CFM

O.D. D.B.	I.D. W.B.	TOT. CAP.	SENS. CAP. AT ENTERING D.B. TEMP. 72	75	78	80	TOTAL KW
85	59	45.4	37.3	42.0	45.4	45.4	3.85
	63	47.3	30.3	34.9	39.6	42.7	3.88
	67	51.0	23.8	28.4	33.1	36.2	3.94
	71	55.1	17.3	21.9	26.6	29.7	3.98
95	59	42.7	36.1	40.8	42.7	42.7	4.27
	63	44.5	29.1	33.8	38.5	41.6	4.29
	67	48.0	22.6	27.3	31.9	35.0	4.36
	71	51.8	16.1	20.8	25.5	28.6	4.40
105	59	41.4	35.6	40.2	41.4	41.4	4.47
	63	43.1	28.5	33.2	37.8	40.9	4.50
	67	46.5	22.1	26.8	31.4	34.5	4.57
	71	50.2	15.6	20.3	24.9	28.0	4.62
115	59	37.4	33.8	37.4	37.4	37.4	5.09
	63	39.0	26.9	31.5	36.2	39.0	5.12
	67	42.0	20.4	25.1	29.7	32.9	5.21
	71	45.3	14.0	18.6	23.3	26.4	5.26

CORRECTION FACTORS FOR OTHER AIRFLOWS (MULTIPLY DATA BY FACTOR)

	AIRFLOW	TOTAL CAPACITY	SENSIBLE CAPACITY
LOW	1400	0.98	0.98
HIGH	1800	1.02	1.02

NOTE: ALL TABLES ABOVE ARE AT ARI RATING CONDITIONS RATED WITH 25 FEET OF REFRIGERANT LINES.
* DRY COIL CONDITION (TOTAL CAPACITY = SENSIBLE CAPACITY)
TOTAL CAPACITY, COMP. KW AND APP. DEW PT. ARE VALID ONLY FOR WET COIL. ALL TEMPERATURES IN DEGREES F.

CORRECTION FACTORS FOR OTHER COMBINATIONS (MULTIPLY DATA BY FACTOR)

INDOOR MODEL		CFM	MBTUH TOT	MBTUH SEN	SYST KW
2TEH3F48A1+4AYTXVH-3	NOMINAL	1600	1.01	1.01	1.00
	LOW	1400	0.99	0.98	0.99
	HIGH	1800	1.03	1.04	1.01
2TEH3F60A1+4AYTXVH-3	NOMINAL	1600	0.99	1.00	0.98
	LOW	1400	0.97	0.97	0.97
	HIGH	1800	1.01	1.03	0.99
2TGB3F48A1+4AYTXVH-3	NOMINAL	1600	1.00	0.99	1.03
	LOW	1400	0.98	0.96	1.02
	HIGH	1800	1.02	1.02	1.04
4TEE3F40A1	NOMINAL	1600	1.02	0.99	0.99
	LOW	1400	1.00	0.96	0.98
	HIGH	1800	1.04	1.02	1.00
4TEP3F48B1	NOMINAL	1600	1.00	1.00	1.00
	LOW	1400	0.98	0.97	0.99
	HIGH	1800	1.02	1.03	1.01
4TXCB048AC3+TDD120R9V5	NOMINAL	1600	0.97	0.98	0.99
	LOW	1400	0.95	0.95	0.98
	HIGH	1800	0.99	1.00	1.00
4TXCB048AC3+TDD1C100A9H5	NOMINAL	1600	0.98	0.98	0.97
	LOW	1400	0.96	0.95	0.96
	HIGH	1800	1.00	1.00	0.98
4TXCB048AC3+TDD1D120A9H5	NOMINAL	1600	0.97	0.97	0.97
	LOW	1400	0.96	0.94	0.96
	HIGH	1800	0.99	1.00	0.98
4TXCB048AC3+TDX1C100A9H4	NOMINAL	1600	0.97	0.97	1.00
	LOW	1400	0.96	0.94	0.99
	HIGH	1800	0.99	1.00	1.01
4TXCB048AC3+TUD120R9V5	NOMINAL	1600	0.97	0.98	1.01
	LOW	1400	0.96	0.95	1.00
	HIGH	1800	0.99	1.00	1.02
4TXCB048AC3+TUD1C080A9H4	NOMINAL	1600	0.98	0.98	0.98
	LOW	1400	0.96	0.95	0.97
	HIGH	1800	1.00	1.01	0.99

CORRECTION FACTORS FOR OTHER COMBINATIONS (MULTIPLY DATA BY FACTOR)

INDOOR MODEL		CFM	MBTUH TOT	MBTUH SEN	SYST KW
4TXCB048AC3+TUD1D120A9H5	NOMINAL	1600	0.98	0.98	0.98
	LOW	1400	0.96	0.95	0.97
	HIGH	1800	1.00	1.01	0.99
4TXCB048AC3+TUD1D140A9H5	NOMINAL	1600	0.98	0.98	0.98
	LOW	1400	0.96	0.95	0.97
	HIGH	1800	1.00	1.01	0.99
4TXCB048AC3+TUX1D120A9H5	NOMINAL	1600	0.98	0.98	0.98
	LOW	1400	0.96	0.95	0.97
	HIGH	1800	1.00	1.01	0.99
4TXCB048AC3+TUY120R9V5	NOMINAL	1600	0.97	0.97	0.99
	LOW	1400	0.96	0.94	0.98
	HIGH	1800	0.99	1.00	1.00
4TXCC037AS3+TDD100R9V5	NOMINAL	1600	0.99	0.98	0.99
	LOW	1400	0.97	0.95	0.98
	HIGH	1800	1.01	1.00	1.00
4TXCC037AS3+TDD1C100A9H5	NOMINAL	1600	1.00	0.99	0.97
	LOW	1400	0.98	0.96	0.96
	HIGH	1800	1.02	1.02	0.98
4TXCC037AS3+TDX1C100A9H4	NOMINAL	1600	0.99	0.98	0.99
	LOW	1400	0.97	0.95	0.98
	HIGH	1800	1.01	1.01	1.00
4TXCC037AS3+TDY100R9V4	NOMINAL	1600	0.99	0.98	1.01
	LOW	1400	0.97	0.95	1.00
	HIGH	1800	1.01	1.01	1.02
4TXCC037AS3+TUD1C100A9H5	NOMINAL	1600	1.00	0.99	0.97
	LOW	1400	0.98	0.96	0.96
	HIGH	1800	1.02	1.02	0.98
4TXCC037AS3+TUX1C100A9H4	NOMINAL	1600	1.00	0.99	0.97
	LOW	1400	0.98	0.96	0.96
	HIGH	1800	1.02	1.02	0.98
4TXCC037AS3+TUY100R9V4	NOMINAL	1600	1.00	0.98	0.98
	LOW	1400	0.98	0.95	0.97
	HIGH	1800	1.02	1.01	0.99
4TXCC049AC3+TDD100R9V5	NOMINAL	1600	0.97	0.98	1.00
	LOW	1400	0.96	0.95	0.99
	HIGH	1800	0.99	1.01	1.01
4TXCC049AC3+TDD120R9V5	NOMINAL	1600	0.97	0.98	0.97
	LOW	1400	0.96	0.95	0.96
	HIGH	1800	0.99	1.00	0.98
4TXCC049AC3+TDD1C100A9H5	NOMINAL	1600	0.98	0.98	0.96
	LOW	1400	0.96	0.95	0.95
	HIGH	1800	1.00	1.01	0.97
4TXCC049AC3+TDD1D120A9H5	NOMINAL	1600	0.98	0.98	0.96
	LOW	1400	0.96	0.95	0.95
	HIGH	1800	1.00	1.01	0.97
4TXCC049AC3+TDX1C100A9H4	NOMINAL	1600	0.98	0.98	1.00
	LOW	1400	0.96	0.95	0.99
	HIGH	1800	1.00	1.01	1.01
4TXCC049AC3+TDX1D120A9H5	NOMINAL	1600	0.98	0.98	0.98
	LOW	1400	0.96	0.95	0.97
	HIGH	1800	1.00	1.01	0.99
4TXCC049AC3+TDY120R9V5	NOMINAL	1600	0.97	0.97	0.98
	LOW	1400	0.96	0.94	0.97
	HIGH	1800	0.99	1.00	0.99
4TXCC049AC3+TUD080R9V4	NOMINAL	1600	0.98	0.98	1.00
	LOW	1400	0.96	0.95	0.99
	HIGH	1800	1.00	1.01	1.01
4TXCC049AC3+TUD100R9V5	NOMINAL	1600	0.97	0.97	1.01
	LOW	1400	0.95	0.94	1.00
	HIGH	1800	0.99	1.00	1.02
4TXCC049AC3+TUD120R9V5	NOMINAL	1600	0.97	0.98	0.97
	LOW	1400	0.96	0.95	0.96
	HIGH	1800	0.99	1.01	0.98

Performance Data
Cooling

4TWB3048A1

CORRECTION FACTORS FOR OTHER COMBINATIONS (MULTIPLY DATA BY FACTOR)

INDOOR MODEL		CFM	MBTUH TOT	MBTUH SEN	SYST KW
4TXCC049AC3+TUD140R9V5	NOMINAL	1600	0.98	0.98	0.98
	LOW	1400	0.96	0.95	0.97
	HIGH	1800	1.00	1.01	0.99
4TXCC049AC3+TUD1C080A9H4	NOMINAL	1600	0.99	0.99	0.97
	LOW	1400	0.97	0.96	0.96
	HIGH	1800	1.01	1.02	0.98
4TXCC049AC3+TUD1C100A9H5	NOMINAL	1600	0.99	0.99	0.96
	LOW	1400	0.97	0.96	0.95
	HIGH	1800	1.01	1.02	0.97
4TXCC049AC3+TUD1D120A9H5	NOMINAL	1600	0.99	0.99	0.96
	LOW	1400	0.97	0.96	0.95
	HIGH	1800	1.01	1.02	0.97
4TXCC049AC3+TUD1D140A9H5	NOMINAL	1600	0.98	0.98	0.96
	LOW	1400	0.96	0.95	0.95
	HIGH	1800	1.00	1.01	0.97
4TXCC049AC3+TUX1C100A9H4	NOMINAL	1600	0.97	0.98	0.98
	LOW	1400	0.96	0.95	0.97
	HIGH	1800	0.99	1.01	0.99
4TXCC049AC3+TUX1D120A9H5	NOMINAL	1600	0.99	0.99	0.96
	LOW	1400	0.97	0.96	0.95
	HIGH	1800	1.01	1.02	0.97
4TXCC049AC3+TUY100R9V4	NOMINAL	1600	0.97	0.97	0.98
	LOW	1400	0.96	0.94	0.97
	HIGH	1800	0.99	1.00	0.99
4TXCC049AC3+TUY120R9V5	NOMINAL	1600	0.98	0.97	0.96
	LOW	1400	0.96	0.94	0.95
	HIGH	1800	1.00	1.00	0.97
4TXCC054AS3+TDD100R9V5	NOMINAL	1600	0.96	0.98	0.98
	LOW	1400	0.95	0.95	0.97
	HIGH	1800	0.98	1.01	0.99
4TXCC054AS3+TDD1C100A9H5	NOMINAL	1600	0.98	1.00	0.98
	LOW	1400	0.96	0.97	0.97
	HIGH	1800	1.00	1.03	0.99
4TXCC054AS3+TDX1C100A9H4	NOMINAL	1600	0.97	0.98	0.99
	LOW	1400	0.95	0.95	0.98
	HIGH	1800	0.99	1.01	1.00
4TXCC054AS3+TUD1C100A9H5	NOMINAL	1600	0.98	0.99	0.97
	LOW	1400	0.96	0.96	0.96
	HIGH	1800	1.00	1.02	0.98
4TXCC054AS3+TUX1C100A9H4	NOMINAL	1600	0.97	0.99	0.98
	LOW	1400	0.96	0.96	0.97
	HIGH	1800	0.99	1.02	0.99
4TXCC054AS3+TUY100R9V4	NOMINAL	1600	0.97	0.99	0.99
	LOW	1400	0.96	0.96	0.98
	HIGH	1800	0.99	1.02	1.00
4TXCD050AC3+TDD100R9V5	NOMINAL	1600	0.97	0.98	0.97
	LOW	1400	0.96	0.95	0.96
	HIGH	1800	0.99	1.01	0.98
4TXCD050AC3+TDD120R9V5	NOMINAL	1600	0.98	0.99	0.97
	LOW	1400	0.96	0.96	0.96
	HIGH	1800	1.00	1.02	0.98
4TXCD050AC3+TDD1C100A9H5	NOMINAL	1600	0.98	0.98	0.96
	LOW	1400	0.96	0.95	0.95
	HIGH	1800	1.00	1.01	0.97
4TXCD050AC3+TDD1D120A9H5	NOMINAL	1600	0.98	0.99	0.97
	LOW	1400	0.96	0.96	0.96
	HIGH	1800	1.00	1.02	0.98
4TXCD050AC3+TDX1C100A9H4	NOMINAL	1600	0.98	0.98	0.98
	LOW	1400	0.96	0.95	0.97
	HIGH	1800	1.00	1.01	0.99
4TXCD050AC3+TDX1D120A9H5	NOMINAL	1600	0.97	0.98	0.97
	LOW	1400	0.96	0.95	0.96
	HIGH	1800	0.99	1.00	0.98

CORRECTION FACTORS FOR OTHER COMBINATIONS (MULTIPLY DATA BY FACTOR)

INDOOR MODEL		CFM	MBTUH TOT	MBTUH SEN	SYST KW
4TXCD050AC3+TDY100R9V4	NOMINAL	1600	0.97	0.97	0.99
	LOW	1400	0.95	0.94	0.98
	HIGH	1800	0.99	1.00	1.00
4TXCD050AC3+TDY120R9V5	NOMINAL	1600	0.98	0.98	0.97
	LOW	1400	0.96	0.95	0.96
	HIGH	1800	1.00	1.01	0.98
4TXCD050AC3+TUD080R9V4	NOMINAL	1600	0.98	0.98	0.98
	LOW	1400	0.96	0.95	0.97
	HIGH	1800	1.00	1.01	0.99
4TXCD050AC3+TUD100R9V5	NOMINAL	1600	0.97	0.97	0.99
	LOW	1400	0.95	0.94	0.98
	HIGH	1800	0.99	1.00	1.00
4TXCD050AC3+TUD120R9V5	NOMINAL	1600	0.97	0.98	0.97
	LOW	1400	0.96	0.95	0.96
	HIGH	1800	0.99	1.00	0.98
4TXCD050AC3+TUD140R9V5	NOMINAL	1600	0.98	0.98	0.98
	LOW	1400	0.96	0.95	0.97
	HIGH	1800	1.00	1.01	0.99
4TXCD050AC3+TUD1C080A9H4	NOMINAL	1600	0.98	0.99	0.97
	LOW	1400	0.96	0.96	0.96
	HIGH	1800	1.00	1.02	0.98
4TXCD050AC3+TUD1C100A9H5	NOMINAL	1600	0.98	0.98	0.96
	LOW	1400	0.96	0.95	0.95
	HIGH	1800	1.00	1.01	0.97
4TXCD050AC3+TUD1D120A9H5	NOMINAL	1600	0.99	0.99	0.96
	LOW	1400	0.97	0.96	0.95
	HIGH	1800	1.01	1.02	0.97
4TXCD050AC3+TUD1D140A9H5	NOMINAL	1600	0.99	0.99	0.96
	LOW	1400	0.97	0.96	0.95
	HIGH	1800	1.01	1.02	0.97
4TXCD050AC3+TUX1C100A9H4	NOMINAL	1600	0.97	0.98	0.97
	LOW	1400	0.95	0.95	0.96
	HIGH	1800	0.99	1.00	0.98
4TXCD050AC3+TUX1D120A9H5	NOMINAL	1600	0.99	0.99	0.96
	LOW	1400	0.97	0.96	0.95
	HIGH	1800	1.01	1.02	0.97
4TXCD050AC3+TUY100R9V4	NOMINAL	1600	0.98	0.97	0.98
	LOW	1400	0.96	0.94	0.97
	HIGH	1800	1.00	1.00	0.99
4TXCD050AC3+TUY120R9V5	NOMINAL	1600	0.99	0.98	0.97
	LOW	1400	0.97	0.95	0.96
	HIGH	1800	1.01	1.01	0.98
4TXCD065AS3	NOMINAL	1600	0.99	1.01	1.01
	LOW	1400	0.97	0.98	1.00
	HIGH	1800	1.01	1.04	1.02
4TXCD065AS3+TUD120R9V5	NOMINAL	1600	0.99	1.02	0.98
	LOW	1400	0.97	0.99	0.97
	HIGH	1800	1.01	1.05	0.99
4TXCD065AS3+TUD140R9V5	NOMINAL	1600	1.00	1.02	0.98
	LOW	1400	0.98	0.99	0.97
	HIGH	1800	1.02	1.05	0.99
4TXCD065AS3+TUD1D140A9H5	NOMINAL	1600	1.00	1.03	0.99
	LOW	1400	0.98	1.00	0.98
	HIGH	1800	1.02	1.06	1.00
4TXCD065AS3+TUX1D120A9H5	NOMINAL	1600	1.00	1.03	0.99
	LOW	1400	0.98	1.00	0.98
	HIGH	1800	1.02	1.06	1.00
4TXCD065AS3+TUY120R9V5	NOMINAL	1600	1.01	1.03	0.98
	LOW	1400	0.99	1.00	0.97
	HIGH	1800	1.03	1.06	0.99
4TXFH054AS3	NOMINAL	1600	1.01	0.98	1.01
	LOW	1400	0.99	0.95	1.00
	HIGH	1800	1.03	1.01	1.02

Performance Data
Cooling

4TWB3048A1

CORRECTION FACTORS FOR OTHER COMBINATIONS (MULTIPLY DATA BY FACTOR)

INDOOR MODEL		CFM	MBTUH TOT	MBTUH SEN	SYST KW
4TXFH054AS3+TDD100R9V5	NOMINAL	1600	1.01	0.98	0.99
	LOW	1400	0.99	0.95	0.98
	HIGH	1800	1.03	1.01	1.00
4TXFH054AS3+TDD120R9V5	NOMINAL	1600	1.02	0.99	1.00
	LOW	1400	1.00	0.96	0.99
	HIGH	1800	1.04	1.02	1.01
4TXFH054AS3+TDD1C100A9H5	NOMINAL	1600	1.02	0.99	1.01
	LOW	1400	1.00	0.96	1.00
	HIGH	1800	1.04	1.02	1.02
4TXFH054AS3+TDD1D120A9H5	NOMINAL	1600	1.02	0.99	1.00
	LOW	1400	1.00	0.96	0.99
	HIGH	1800	1.04	1.02	1.01
4TXFH054AS3+TDX1C100A9H4	NOMINAL	1600	1.01	0.98	0.99
	LOW	1400	0.99	0.95	0.98
	HIGH	1800	1.03	1.01	1.00
4TXFH054AS3+TDX1D120A9H5	NOMINAL	1600	1.01	0.98	0.99
	LOW	1400	0.99	0.95	0.98
	HIGH	1800	1.03	1.01	1.00
4TXFH054AS3+TDY100R9V4	NOMINAL	1600	1.02	0.98	1.01
	LOW	1400	1.00	0.95	1.00
	HIGH	1800	1.04	1.01	1.02
4TXFH054AS3+TDY120R9V5	NOMINAL	1600	1.02	0.99	0.99
	LOW	1400	1.00	0.96	0.98
	HIGH	1800	1.04	1.02	1.00
4TXFH054AS3+TUD080R9V4	NOMINAL	1600	1.01	0.98	0.99
	LOW	1400	0.99	0.95	0.98
	HIGH	1800	1.03	1.01	1.00
4TXFH054AS3+TUD100R9V5	NOMINAL	1600	1.00	0.98	0.99
	LOW	1400	0.98	0.95	0.98
	HIGH	1800	1.02	1.00	1.00
4TXFH054AS3+TUD120R9V5	NOMINAL	1600	1.02	0.99	1.00
	LOW	1400	1.00	0.96	0.99
	HIGH	1800	1.04	1.02	1.01
4TXFH054AS3+TUD140R9V5	NOMINAL	1600	1.01	0.98	0.99
	LOW	1400	0.99	0.95	0.98
	HIGH	1800	1.03	1.01	1.00
4TXFH054AS3+TUD1C080A9H4	NOMINAL	1600	1.02	0.99	1.00
	LOW	1400	1.00	0.96	0.99
	HIGH	1800	1.04	1.02	1.01
4TXFH054AS3+TUD1C100A9H5	NOMINAL	1600	1.01	0.99	1.00
	LOW	1400	0.99	0.96	0.99
	HIGH	1800	1.03	1.02	1.01
4TXFH054AS3+TUD1D120A9H5	NOMINAL	1600	1.02	0.99	1.00
	LOW	1400	1.00	0.96	0.99
	HIGH	1800	1.04	1.02	1.01
4TXFH054AS3+TUD1D140A9H5	NOMINAL	1600	1.02	0.99	1.00
	LOW	1400	1.00	0.96	0.99
	HIGH	1800	1.04	1.02	1.01
4TXFH054AS3+TUX1C100A9H4	NOMINAL	1600	1.02	0.99	1.00
	LOW	1400	1.00	0.96	0.99
	HIGH	1800	1.04	1.02	1.01
4TXFH054AS3+TUX1D120A9H5	NOMINAL	1600	1.01	0.99	1.00
	LOW	1400	0.99	0.96	0.99
	HIGH	1800	1.03	1.02	1.01
4TXFH054AS3+TUY100R9V4	NOMINAL	1600	1.02	0.99	0.99
	LOW	1400	1.00	0.96	0.98
	HIGH	1800	1.04	1.02	1.00
4TXFH054AS3+TUY120R9V5	NOMINAL	1600	1.02	0.99	0.99
	LOW	1400	1.00	0.96	0.98
	HIGH	1800	1.04	1.02	1.00
RXA061S3	NOMINAL	1600	0.99	0.99	1.01
	LOW	1400	0.97	0.96	1.00
	HIGH	1800	1.01	1.02	1.02

CORRECTION FACTORS FOR OTHER COMBINATIONS (MULTIPLY DATA BY FACTOR)

INDOOR MODEL		CFM	MBTUH TOT	MBTUH SEN	SYST KW
RXC037S3+TDD100R9V5	NOMINAL	1600	1.00	0.97	1.00
	LOW	1400	0.98	0.94	0.99
	HIGH	1800	1.02	1.00	1.01
RXC037S3+TDD1C100A9H5	NOMINAL	1600	1.02	0.99	0.99
	LOW	1400	1.00	0.96	0.98
	HIGH	1800	1.04	1.02	1.00
RXC037S3+TDX1C100A9H4	NOMINAL	1600	1.00	0.98	0.98
	LOW	1400	0.98	0.95	0.97
	HIGH	1800	1.02	1.00	0.99
RXC037S3+TDY100R9V4	NOMINAL	1600	1.00	0.97	0.99
	LOW	1400	0.98	0.94	0.98
	HIGH	1800	1.02	1.00	1.00
RXC037S3+TUD1C100A9H5	NOMINAL	1600	1.01	0.98	0.98
	LOW	1400	0.99	0.95	0.97
	HIGH	1800	1.03	1.01	0.99
RXC037S3+TUX1C100A9H4	NOMINAL	1600	1.01	0.98	0.98
	LOW	1400	0.99	0.95	0.97
	HIGH	1800	1.03	1.01	0.99
RXC037S3+TUY100R9V4	NOMINAL	1600	1.01	0.98	1.00
	LOW	1400	0.99	0.95	0.99
	HIGH	1800	1.03	1.00	1.01
RXC054S3+TDD100R9V5	NOMINAL	1600	0.98	0.98	0.99
	LOW	1400	0.96	0.95	0.98
	HIGH	1800	1.00	1.01	1.00
RXC054S3+TDD1C100A9H5	NOMINAL	1600	0.99	0.99	0.97
	LOW	1400	0.97	0.96	0.96
	HIGH	1800	1.01	1.02	0.98
RXC054S3+TDX1C100A9H4	NOMINAL	1600	0.99	0.98	0.99
	LOW	1400	0.97	0.95	0.98
	HIGH	1800	1.01	1.01	1.00
RXC054S3+TDY100R9V4	NOMINAL	1600	0.98	0.97	1.00
	LOW	1400	0.96	0.94	0.99
	HIGH	1800	1.00	1.00	1.01
RXC054S3+TUD100R9V5	NOMINAL	1600	0.98	0.98	1.01
	LOW	1400	0.96	0.95	1.00
	HIGH	1800	1.00	1.01	1.02
RXC054S3+TUD1C100A9H5	NOMINAL	1600	0.99	0.98	0.96
	LOW	1400	0.97	0.95	0.95
	HIGH	1800	1.01	1.01	0.97
RXC054S3+TUX1C100A9H4	NOMINAL	1600	0.98	0.98	0.99
	LOW	1400	0.96	0.95	0.98
	HIGH	1800	1.00	1.01	1.00
RXC054S3+TUY100R9V4	NOMINAL	1600	0.99	0.98	0.97
	LOW	1400	0.97	0.95	0.96
	HIGH	1800	1.01	1.00	0.98
RXC061S3	NOMINAL	1600	0.99	0.99	1.01
	LOW	1400	0.97	0.96	1.00
	HIGH	1800	1.01	1.02	1.02
TXH041A4+4AYTXVH-3+TDD100R9V5	NOMINAL	1600	0.97	0.94	0.98
	LOW	1400	0.96	0.92	0.97
	HIGH	1800	0.99	0.97	0.99
TXH041A4+4AYTXVH-3+TDD120R9V5	NOMINAL	1600	0.98	0.96	0.97
	LOW	1400	0.96	0.93	0.96
	HIGH	1800	1.00	0.99	0.98
TXH041A4+4AYTXVH-3+TDD1C100A9H5	NOMINAL	1600	0.99	0.96	0.96
	LOW	1400	0.97	0.94	0.95
	HIGH	1800	1.01	0.99	0.97
TXH041A4+4AYTXVH-3+TDD1D120A9H5	NOMINAL	1600	0.99	0.96	0.96
	LOW	1400	0.97	0.94	0.95
	HIGH	1800	1.01	0.99	0.97
TXH041A4+4AYTXVH-3+TDX1C100A9H4	NOMINAL	1600	0.97	0.94	0.98
	LOW	1400	0.96	0.92	0.97
	HIGH	1800	0.99	0.97	0.99

Performance Data
Cooling

4TWB3048A1

CORRECTION FACTORS FOR OTHER COMBINATIONS (MULTIPLY DATA BY FACTOR)

INDOOR MODEL		CFM	MBTUH TOT	MBTUH SEN	SYST KW
TXH041A4+4AYTXVH-3+TDX1D120A9H5	NOMINAL	1600	0.98	0.95	0.95
	LOW	1400	0.96	0.92	0.94
	HIGH	1800	1.00	0.98	0.96
TXH041A4+4AYTXVH-3+TDY100R9V4	NOMINAL	1600	0.98	0.94	1.00
	LOW	1400	0.96	0.92	0.99
	HIGH	1800	1.00	0.97	1.01
TXH041A4+4AYTXVH-3+TDY120R9V5	NOMINAL	1600	0.98	0.95	0.97
	LOW	1400	0.96	0.92	0.96
	HIGH	1800	1.00	0.98	0.98
TXH041A4+4AYTXVH-3+TUD100R9V5	NOMINAL	1600	0.97	0.94	0.99
	LOW	1400	0.95	0.91	0.98
	HIGH	1800	0.99	0.97	1.00
TXH041A4+4AYTXVH-3+TUD120R9V5	NOMINAL	1600	0.98	0.96	0.97
	LOW	1400	0.96	0.93	0.96
	HIGH	1800	1.00	0.98	0.98
TXH041A4+4AYTXVH-3+TUD140R9V5	NOMINAL	1600	0.98	0.95	0.96
	LOW	1400	0.96	0.92	0.95
	HIGH	1800	1.00	0.98	0.97
TXH041A4+4AYTXVH-3+TUD1C100A9H5	NOMINAL	1600	0.98	0.95	0.96
	LOW	1400	0.96	0.92	0.95
	HIGH	1800	1.00	0.98	0.97
TXH041A4+4AYTXVH-3+TUD1D120A9H5	NOMINAL	1600	0.99	0.96	0.96
	LOW	1400	0.97	0.93	0.95
	HIGH	1800	1.01	0.99	0.97
TXH041A4+4AYTXVH-3+TUD1D140A9H5	NOMINAL	1600	0.99	0.96	0.96
	LOW	1400	0.97	0.93	0.95
	HIGH	1800	1.01	0.99	0.97
TXH041A4+4AYTXVH-3+TUX1C100A9H4	NOMINAL	1600	0.99	0.96	0.96
	LOW	1400	0.97	0.93	0.95
	HIGH	1800	1.01	0.99	0.97
TXH041A4+4AYTXVH-3+TUX1D120A9H5	NOMINAL	1600	0.99	0.96	0.96
	LOW	1400	0.97	0.93	0.95
	HIGH	1800	1.01	0.98	0.97
TXH041A4+4AYTXVH-3+TUY100R9V4	NOMINAL	1600	0.99	0.95	0.97
	LOW	1400	0.97	0.92	0.96
	HIGH	1800	1.01	0.98	0.98
TXH041A4+4AYTXVH-3+TUY120R9V5	NOMINAL	1600	0.99	0.95	0.97
	LOW	1400	0.97	0.92	0.96
	HIGH	1800	1.01	0.98	0.98
TXH054A4+4AYTXVH-3	NOMINAL	1600	1.01	0.98	1.01
	LOW	1400	0.99	0.95	1.00
	HIGH	1800	1.03	1.01	1.02
TXH054A4+4AYTXVH-3+TDD100R9V5	NOMINAL	1600	1.01	0.98	0.99
	LOW	1400	0.99	0.95	0.98
	HIGH	1800	1.03	1.01	1.00
TXH054A4+4AYTXVH-3+TDD120R9V5	NOMINAL	1600	1.02	0.99	1.00
	LOW	1400	1.00	0.96	0.99
	HIGH	1800	1.04	1.02	1.01

CORRECTION FACTORS FOR OTHER COMBINATIONS (MULTIPLY DATA BY FACTOR)

INDOOR MODEL		CFM	MBTUH TOT	MBTUH SEN	SYST KW
TXH054A4+4AYTXVH-3+TDD1D120A9H5	NOMINAL	1600	1.02	0.99	1.00
	LOW	1400	1.00	0.96	0.99
	HIGH	1800	1.04	1.02	1.01
TXH054A4+4AYTXVH-3+TDX1C100A9H4	NOMINAL	1600	1.01	0.98	0.99
	LOW	1400	0.99	0.95	0.98
	HIGH	1800	1.03	1.01	1.00
TXH054A4+4AYTXVH-3+TDX1D120A9H5	NOMINAL	1600	1.01	0.98	0.99
	LOW	1400	0.99	0.95	0.98
	HIGH	1800	1.03	1.01	1.00
TXH054A4+4AYTXVH-3+TDY100R9V4	NOMINAL	1600	1.02	0.98	1.01
	LOW	1400	1.00	0.95	1.00
	HIGH	1800	1.04	1.01	1.02
TXH054A4+4AYTXVH-3+TDY120R9V5	NOMINAL	1600	1.02	0.99	0.99
	LOW	1400	1.00	0.96	0.98
	HIGH	1800	1.04	1.02	1.00
TXH054A4+4AYTXVH-3+TUD100R9V5	NOMINAL	1600	1.00	0.98	0.99
	LOW	1400	0.98	0.95	0.98
	HIGH	1800	1.02	1.00	1.00
TXH054A4+4AYTXVH-3+TUD120R9V5	NOMINAL	1600	1.02	0.99	1.00
	LOW	1400	1.00	0.96	0.99
	HIGH	1800	1.04	1.02	1.01
TXH054A4+4AYTXVH-3+TUD140R9V5	NOMINAL	1600	1.01	0.98	0.99
	LOW	1400	0.99	0.95	0.98
	HIGH	1800	1.03	1.01	1.00
TXH054A4+4AYTXVH-3+TUD1C100A9H5	NOMINAL	1600	1.01	0.99	1.00
	LOW	1400	0.99	0.96	0.99
	HIGH	1800	1.03	1.02	1.01
TXH054A4+4AYTXVH-3+TUD1D120A9H5	NOMINAL	1600	1.02	0.99	1.00
	LOW	1400	1.00	0.96	0.99
	HIGH	1800	1.04	1.02	1.01
TXH054A4+4AYTXVH-3+TUD1D140A9H5	NOMINAL	1600	1.02	0.99	1.00
	LOW	1400	1.00	0.96	0.99
	HIGH	1800	1.04	1.02	1.01
TXH054A4+4AYTXVH-3+TUX1C100A9H4	NOMINAL	1600	1.02	0.99	1.00
	LOW	1400	1.00	0.96	0.99
	HIGH	1800	1.04	1.02	1.01
TXH054A4+4AYTXVH-3+TUX1D120A9H5	NOMINAL	1600	1.01	0.99	1.00
	LOW	1400	0.99	0.96	0.99
	HIGH	1800	1.03	1.02	1.01
TXH054A4+4AYTXVH-3+TUY100R9V4	NOMINAL	1600	1.02	0.99	0.99
	LOW	1400	1.00	0.96	0.98
	HIGH	1800	1.04	1.02	1.00
TXH054A4+4AYTXVH-3+TUY120R9V5	NOMINAL	1600	1.02	0.99	0.99
	LOW	1400	1.00	0.96	0.98
	HIGH	1800	1.04	1.02	1.00

Performance Data
Cooling

4TWB3060A1

4TWB3060A1 WITH 4TEC3F60A1 AT 2000 CFM

O.D. D.B.	I.D. W.B.	TOT. CAP.	SENS. CAP. AT ENTERING D.B. TEMP. 72	75	78	80	TOTAL KW
85	59	54.7	45.4	51.0	54.7	54.7	4.66
	63	57.0	36.9	42.5	48.1	51.9	4.69
	67	61.4	29.1	34.7	40.3	44.1	4.77
	71	66.3	21.2	26.8	32.5	36.2	4.81
95	59	51.7	44.1	49.7	51.7	51.7	5.21
	63	54.0	35.6	41.3	46.9	50.6	5.25
	67	58.1	27.8	33.5	39.1	42.9	5.33
	71	62.8	20.0	25.6	31.3	35.0	5.38
105	59	50.3	43.4	49.1	50.3	50.3	5.49
	63	52.4	35.0	40.6	46.3	50.1	5.52
	67	56.5	27.2	32.8	38.5	42.2	5.62
	71	61.0	19.4	25.0	30.7	34.4	5.67
115	59	45.9	41.5	45.9	45.9	45.9	6.32
	63	47.8	33.1	38.8	44.5	47.8	6.36
	67	51.5	25.4	31.0	36.6	40.4	6.46
	71	55.6	17.5	23.2	28.9	32.6	6.52

CORRECTION FACTORS FOR OTHER AIRFLOWS (MULTIPLY DATA BY FACTOR)

	AIRFLOW	TOTAL CAPACITY	SENSIBLE CAPACITY
LOW	1750	0.98	0.98
HIGH	2250	1.02	1.02

NOTE: ALL TABLES ABOVE ARE AT ARI RATING CONDITIONS RATED WITH 25 FEET OF REFRIGERANT LINES.
* DRY COIL CONDITION (TOTAL CAPACITY = SENSIBLE CAPACITY)
TOTAL CAPACITY, COMP. KW AND APP. DEW PT. ARE VALID ONLY FOR WET COIL. ALL TEMPERATURES IN DEGREES F.

CORRECTION FACTORS FOR OTHER COMBINATIONS (MULTIPLY DATA BY FACTOR)

INDOOR MODEL		CFM	MBTUH TOT	MBTUH SEN	SYST KW
2TEH3F60A1+4AYTXVH-3	NOMINAL	2000	0.99	0.98	1.00
	LOW	1750	0.97	0.95	0.99
	HIGH	2250	1.01	1.01	1.01

Performance Data
Heating

4TWB3018A1

4TWB3018A1 WITH 4TEC3F18A1 AT 675 CFM

O.D. TEMP. F.	HEATING CAPACITY MBH AT INDOOR DRY BULB TEMP. 70	75	80	TOTAL POWER IN KILOWATTS AT INDOOR DRY BULB TEMP. 70	75	80
2	7.06	6.99	6.92	1.26	1.30	1.34
7	8.07	7.99	7.91	1.28	1.32	1.36
12	9.08	8.99	8.91	1.30	1.34	1.38
17	10.09	9.99	9.90	1.32	1.35	1.39
22	10.91	10.80	10.70	1.35	1.39	1.43
27	11.73	11.61	11.50	1.39	1.43	1.47
32	12.54	12.42	12.31	1.42	1.47	1.51
37	13.56	13.42	13.30	1.44	1.48	1.53
42	14.86	14.71	14.58	1.43	1.47	1.51
47	16.17	16.01	15.86	1.42	1.46	1.50
52	17.18	17.01	16.86	1.43	1.48	1.52
57	18.20	18.01	17.85	1.45	1.49	1.54
62	19.21	19.02	18.84	1.47	1.51	1.56
67	20.22	20.02	19.84	1.49	1.53	1.57
72	21.23	21.02	20.83	1.50	1.55	1.59

CORRECTION FACTORS FOR OTHER AIRFLOWS (MULTIPLY DATA BY FACTOR)

	AIRFLOW	TOTAL CAPACITY	SENSIBLE CAPACITY
LOW	525	0.99	0.98
HIGH	675	1.01	1.03

NOTE: ALL TABLES ABOVE ARE AT ARI RATING CONDITIONS RATED WITH 25 FEET OF REFRIGERANT LINES.

CORRECTION FACTORS FOR OTHER COMBINATIONS (MULTIPLY DATA BY FACTOR)

INDOOR MODEL		CFM	MBTUH TOT	SYST KW
2TEH3F18A1+4AYTXVH-3	NOMINAL	600	1.00	0.94
	LOW	525	0.99	0.92
	HIGH	675	1.02	0.96
2TEH3F24A1+4AYTXVH-3	NOMINAL	600	0.98	0.94
	LOW	525	0.96	0.92
	HIGH	675	0.99	0.96
4TEE3F31A1	NOMINAL	600	1.03	0.98
	LOW	525	1.02	0.96
	HIGH	675	1.04	1.00

CORRECTION FACTORS FOR OTHER COMBINATIONS (MULTIPLY DATA BY FACTOR)

INDOOR MODEL		CFM	MBTUH TOT	SYST KW
4TXCA018AC3+TDD060R9V3	NOMINAL	600	0.98	0.95
	LOW	525	0.97	0.93
	HIGH	675	0.99	0.98
4TXCA018AC3+TDD080R9V3	NOMINAL	600	0.98	0.97
	LOW	525	0.97	0.95
	HIGH	675	0.99	1.00
4TXCA018AC3+TDY060R9V3	NOMINAL	600	0.98	0.95
	LOW	525	0.97	0.93
	HIGH	675	0.99	0.98
4TXCA018AC3+TUD060R9V3	NOMINAL	600	0.98	0.97
	LOW	525	0.97	0.94
	HIGH	675	0.99	0.99
4TXCA018AC3+TUD100R9V3	NOMINAL	600	0.98	0.95
	LOW	525	0.97	0.93
	HIGH	675	0.99	0.98
4TXCA018AC3+TUY060R9V3	NOMINAL	600	0.98	0.97
	LOW	525	0.97	0.94
	HIGH	675	0.99	0.99
4TXFH018AS3+TDD060R9V3	NOMINAL	600	0.97	0.95
	LOW	525	0.96	0.92
	HIGH	675	0.98	0.97
4TXFH018AS3+TDD080R9V3	NOMINAL	600	0.97	0.97
	LOW	525	0.96	0.94
	HIGH	675	0.98	0.99
4TXFH018AS3+TDY060R9V3	NOMINAL	600	0.97	0.94
	LOW	525	0.96	0.92
	HIGH	675	0.98	0.97
TXH025A4+4AYTXVH-3+TDD060R9V3	NOMINAL	600	0.97	0.95
	LOW	525	0.96	0.92
	HIGH	675	0.98	0.97
TXH025A4+4AYTXVH-3+TDY060R9V3	NOMINAL	600	0.97	0.94
	LOW	525	0.96	0.92
	HIGH	675	0.98	0.97

Performance Data
Heating

4TWB3024A1

4TWB3024A1 WITH 4TEC3F24A1 AT 850 CFM

O.D. TEMP. F.	HEATING CAPACITY MBH AT INDOOR DRY BULB TEMP. 70	75	80	TOTAL POWER IN KILOWATTS AT INDOOR DRY BULB TEMP. 70	75	80
2	9.10	9.01	8.93	1.55	1.60	1.64
7	10.55	10.45	10.35	1.59	1.64	1.69
12	12.00	11.88	11.78	1.64	1.69	1.74
17	13.46	13.32	13.20	1.68	1.73	1.78
22	14.58	14.44	14.30	1.72	1.77	1.82
27	15.71	15.55	15.41	1.75	1.80	1.85
32	16.84	16.67	16.52	1.78	1.84	1.89
37	18.29	18.10	17.94	1.83	1.88	1.94
42	20.23	20.02	19.84	1.89	1.94	2.00
47	22.16	21.94	21.74	1.94	2.00	2.06
52	23.61	23.38	23.16	1.99	2.05	2.11
57	25.07	24.81	24.59	2.03	2.09	2.15
62	26.52	26.25	26.01	2.08	2.14	2.20
67	27.97	27.69	27.44	2.12	2.18	2.25
72	29.42	29.12	28.86	2.16	2.23	2.29

CORRECTION FACTORS FOR OTHER AIRFLOWS (MULTIPLY DATA BY FACTOR)

	AIRFLOW	TOTAL CAPACITY	SENSIBLE CAPACITY
LOW	700	0.99	0.98
HIGH	900	1.01	1.03

NOTE: ALL TABLES ABOVE ARE AT ARI RATING CONDITIONS RATED WITH 25 FEET OF REFRIGERANT LINES.

CORRECTION FACTORS FOR OTHER COMBINATIONS (MULTIPLY DATA BY FACTOR)

INDOOR MODEL		CFM	MBTUH TOT	SYST KW
2TEH3F24A1+4AYTXVH-3	NOMINAL	800	1.01	0.95
	LOW	700	1.00	0.92
	HIGH	900	1.02	0.97
2TEH3F30A1+4AYTXVH-3	NOMINAL	800	0.99	0.94
	LOW	700	0.97	0.92
	HIGH	900	1.00	0.97
2TFB3F30B1+4AYTXVH-3	NOMINAL	800	0.98	1.01
	LOW	700	0.97	0.99
	HIGH	900	0.99	1.04
2TGB3F25A1+4AYTXVH-3	NOMINAL	800	1.01	1.01
	LOW	700	1.00	0.98
	HIGH	900	1.02	1.03
4TEE3F31A1	NOMINAL	800	1.00	0.97
	LOW	700	0.99	0.94
	HIGH	900	1.01	0.99
4TEP3F24A1	NOMINAL	800	0.99	0.99
	LOW	700	0.98	0.96
	HIGH	900	1.00	1.01
4TFE3F25B1	NOMINAL	800	1.04	0.97
	LOW	700	1.02	0.94
	HIGH	900	1.05	0.99
4TXCA024AC3+TDD060R9V3	NOMINAL	800	0.93	0.90
	LOW	700	0.92	0.88
	HIGH	900	0.95	0.92
4TXCA024AC3+TDD080R9V3	NOMINAL	800	0.93	0.89
	LOW	700	0.92	0.87
	HIGH	900	0.94	0.91
4TXCA024AC3+TDX1B060A9H3	NOMINAL	800	0.93	0.91
	LOW	700	0.92	0.89
	HIGH	900	0.94	0.93
4TXCA024AC3+TDY060R9V3	NOMINAL	800	0.93	0.90
	LOW	700	0.92	0.88
	HIGH	900	0.94	0.92
4TXCA024AC3+TDY080R9V3	NOMINAL	800	0.93	0.90
	LOW	700	0.92	0.88
	HIGH	900	0.94	0.92

CORRECTION FACTORS FOR OTHER COMBINATIONS (MULTIPLY DATA BY FACTOR)

INDOOR MODEL		CFM	MBTUH TOT	SYST KW
4TXCA024AC3+TUX1B060A9H3	NOMINAL	800	0.93	0.91
	LOW	700	0.92	0.89
	HIGH	900	0.94	0.93
4TXCA024AC3+TUY060R9V3	NOMINAL	800	0.94	0.92
	LOW	700	0.93	0.89
	HIGH	900	0.95	0.94
4TXCA024AC3+TUY080R9V3	NOMINAL	800	0.93	0.90
	LOW	700	0.92	0.88
	HIGH	900	0.95	0.93
4TXCB025AC3+TDD060R9V3	NOMINAL	800	0.96	0.91
	LOW	700	0.95	0.89
	HIGH	900	0.97	0.93
4TXCB025AC3+TDD080R9V3	NOMINAL	800	0.96	0.90
	LOW	700	0.95	0.88
	HIGH	900	0.97	0.92
4TXCB025AC3+TDX1B060A9H3	NOMINAL	800	0.96	0.92
	LOW	700	0.95	0.90
	HIGH	900	0.97	0.94
4TXCB025AC3+TDY060R9V3	NOMINAL	800	0.96	0.91
	LOW	700	0.95	0.89
	HIGH	900	0.97	0.93
4TXCB025AC3+TDY080R9V3	NOMINAL	800	0.96	0.91
	LOW	700	0.95	0.89
	HIGH	900	0.97	0.93
4TXCB025AC3+TUX1B060A9H3	NOMINAL	800	0.96	0.92
	LOW	700	0.95	0.90
	HIGH	900	0.97	0.95
4TXCB025AC3+TUY060R9V3	NOMINAL	800	0.97	0.93
	LOW	700	0.95	0.90
	HIGH	900	0.98	0.95
4TXCB025AC3+TUY080R9V3	NOMINAL	800	0.96	0.91
	LOW	700	0.95	0.89
	HIGH	900	0.97	0.94
4TXCB031AC3+TDD060R9V3	NOMINAL	800	0.96	0.91
	LOW	700	0.95	0.89
	HIGH	900	0.97	0.93
4TXCB031AC3+TDD080R9V3	NOMINAL	800	0.96	0.90
	LOW	700	0.95	0.88
	HIGH	900	0.97	0.92
4TXCB031AC3+TDX1B060A9H3	NOMINAL	800	0.96	0.92
	LOW	700	0.95	0.89
	HIGH	900	0.97	0.94
4TXCB031AC3+TDX1B080A9H3	NOMINAL	800	0.96	0.94
	LOW	700	0.95	0.91
	HIGH	900	0.98	0.96
4TXCB031AC3+TDY060R9V3	NOMINAL	800	0.96	0.91
	LOW	700	0.95	0.89
	HIGH	900	0.97	0.93
4TXCB031AC3+TDY080R9V3	NOMINAL	800	0.96	0.91
	LOW	700	0.95	0.89
	HIGH	900	0.97	0.93
4TXCB031AC3+TUX1B060A9H3	NOMINAL	800	0.96	0.92
	LOW	700	0.95	0.90
	HIGH	900	0.97	0.95
4TXCB031AC3+TUY060R9V3	NOMINAL	800	0.97	0.92
	LOW	700	0.95	0.90
	HIGH	900	0.98	0.95
4TXCB031AC3+TUY080R9V3	NOMINAL	800	0.96	0.91
	LOW	700	0.95	0.89
	HIGH	900	0.97	0.94
4TXFH018AS3+TDD060R9V3	NOMINAL	800	0.92	0.88
	LOW	700	0.90	0.86
	HIGH	900	0.93	0.91

Performance Data
Heating

4TWB3024A1

CORRECTION FACTORS FOR OTHER COMBINATIONS (MULTIPLY DATA BY FACTOR)

INDOOR MODEL		CFM	MBTUH TOT	SYST KW
4TXFH018AS3+TDD080R9V3	NOMINAL	800	0.92	0.88
	LOW	700	0.90	0.86
	HIGH	900	0.93	0.90
4TXFH018AS3+TDX1B060A9H3	NOMINAL	800	0.92	0.90
	LOW	700	0.91	0.88
	HIGH	900	0.93	0.93
4TXFH018AS3+TDY060R9V3	NOMINAL	800	0.92	0.90
	LOW	700	0.91	0.88
	HIGH	900	0.93	0.92
4TXFH018AS3+TDY080R9V3	NOMINAL	800	0.92	0.90
	LOW	700	0.91	0.88
	HIGH	900	0.93	0.92
4TXFH018AS3+TUX1B060A9H3	NOMINAL	800	0.92	0.90
	LOW	700	0.91	0.88
	HIGH	900	0.93	0.93
4TXFH018AS3+TUY060R9V3	NOMINAL	800	0.92	0.90
	LOW	700	0.91	0.88
	HIGH	900	0.93	0.93
4TXFH018AS3+TUY080R9V3	NOMINAL	800	0.92	0.89
	LOW	700	0.90	0.87
	HIGH	900	0.93	0.91
4TXFH033AS3+TDD060R9V3	NOMINAL	800	0.96	0.90
	LOW	700	0.95	0.88
	HIGH	900	0.97	0.93
4TXFH033AS3+TDD080R9V3	NOMINAL	800	0.96	0.90
	LOW	700	0.95	0.87
	HIGH	900	0.97	0.92
4TXFH033AS3+TDX1B060A9H3	NOMINAL	800	0.96	0.92
	LOW	700	0.95	0.90
	HIGH	900	0.97	0.94
4TXFH033AS3+TDY060R9V3	NOMINAL	800	0.96	0.91
	LOW	700	0.95	0.89
	HIGH	900	0.97	0.93
4TXFH033AS3+TDY080R9V3	NOMINAL	800	0.96	0.91
	LOW	700	0.95	0.88
	HIGH	900	0.97	0.93
4TXFH033AS3+TUD100R9V3	NOMINAL	800	0.96	0.91
	LOW	700	0.95	0.89
	HIGH	900	0.97	0.93
4TXFH033AS3+TUX1B060A9H3	NOMINAL	800	0.96	0.92
	LOW	700	0.95	0.90
	HIGH	900	0.97	0.94
4TXFH033AS3+TUY060R9V3	NOMINAL	800	0.97	0.92
	LOW	700	0.96	0.90
	HIGH	900	0.98	0.94

CORRECTION FACTORS FOR OTHER COMBINATIONS (MULTIPLY DATA BY FACTOR)

INDOOR MODEL		CFM	MBTUH TOT	SYST KW
4TXFH033AS3+TUY080R9V3	NOMINAL	800	0.96	0.91
	LOW	700	0.95	0.88
	HIGH	900	0.97	0.93
TXH033A4+4AYTXVH-3+TDD060R9V3	NOMINAL	800	0.96	0.91
	LOW	700	0.95	0.89
	HIGH	900	0.97	0.93
TXH033A4+4AYTXVH-3+TDD080R9V3	NOMINAL	800	0.96	0.91
	LOW	700	0.95	0.89
	HIGH	900	0.97	0.93
TXH033A4+4AYTXVH-3+TDX1B040A9H2	NOMINAL	800	0.97	0.93
	LOW	700	0.95	0.90
	HIGH	900	0.98	0.95
TXH033A4+4AYTXVH-3+TDX1B060A9H3	NOMINAL	800	0.96	0.92
	LOW	700	0.95	0.90
	HIGH	900	0.97	0.94
TXH033A4+4AYTXVH-3+TDY060R9V3	NOMINAL	800	0.96	0.90
	LOW	700	0.95	0.88
	HIGH	900	0.97	0.92
TXH033A4+4AYTXVH-3+TDY080R9V3	NOMINAL	800	0.96	0.91
	LOW	700	0.95	0.88
	HIGH	900	0.97	0.93
TXH033A4+4AYTXVH-3+TUD060R9V3	NOMINAL	800	0.96	0.92
	LOW	700	0.95	0.90
	HIGH	900	0.97	0.95
TXH033A4+4AYTXVH-3+TUD080R9V3	NOMINAL	800	0.96	0.92
	LOW	700	0.95	0.89
	HIGH	900	0.97	0.94
TXH033A4+4AYTXVH-3+TUD1A040A9H2	NOMINAL	800	0.96	0.94
	LOW	700	0.95	0.91
	HIGH	900	0.97	0.96
TXH033A4+4AYTXVH-3+TUD1B060A9H3	NOMINAL	800	0.96	0.92
	LOW	700	0.95	0.89
	HIGH	900	0.97	0.94
TXH033A4+4AYTXVH-3+TUX1B040A9H2	NOMINAL	800	0.96	0.92
	LOW	700	0.95	0.90
	HIGH	900	0.97	0.94
TXH033A4+4AYTXVH-3+TUX1B060A9H3	NOMINAL	800	0.96	0.92
	LOW	700	0.95	0.90
	HIGH	900	0.97	0.94
TXH033A4+4AYTXVH-3+TUY060R9V3	NOMINAL	800	0.96	0.91
	LOW	700	0.95	0.88
	HIGH	900	0.97	0.93
TXH033A4+4AYTXVH-3+TUY080R9V3	NOMINAL	800	0.96	0.90
	LOW	700	0.94	0.88
	HIGH	900	0.97	0.92

Performance Data
Heating

4TWB3030A1

4TWB3030A1 WITH 4TEC3F30A1 AT 980 CFM

O.D. TEMP. F.	HEATING CAPACITY MBH AT INDOOR DRY BULB TEMP. 70	75	80	TOTAL POWER IN KILOWATTS AT INDOOR DRY BULB TEMP. 70	75	80
2	9.07	8.98	8.89	1.74	1.79	1.84
7	11.25	11.14	11.04	1.82	1.88	1.93
12	13.43	13.30	13.18	1.91	1.97	2.02
17	15.61	15.46	15.32	2.00	2.06	2.12
22	16.70	16.53	16.38	2.05	2.11	2.17
27	17.78	17.60	17.44	2.10	2.17	2.23
32	18.87	18.68	18.51	2.16	2.22	2.29
37	21.05	20.84	20.65	2.24	2.31	2.38
42	24.88	24.63	24.40	2.38	2.45	2.52
47	28.71	28.42	28.16	2.52	2.59	2.67
52	30.89	30.58	30.30	2.60	2.68	2.76
57	33.07	32.74	32.44	2.69	2.77	2.85
62	35.25	34.90	34.58	2.77	2.86	2.94
67	37.43	37.06	36.72	2.86	2.95	3.03
72	39.61	39.22	38.86	2.95	3.04	3.12

CORRECTION FACTORS FOR OTHER AIRFLOWS (MULTIPLY DATA BY FACTOR)

	AIRFLOW	TOTAL CAPACITY	SENSIBLE CAPACITY
LOW	875	0.99	0.98
HIGH	1125	1.01	1.03

NOTE: ALL TABLES ABOVE ARE AT ARI RATING CONDITIONS RATED WITH 25 FEET OF REFRIGERANT LINES.

CORRECTION FACTORS FOR OTHER COMBINATIONS (MULTIPLY DATA BY FACTOR)

INDOOR MODEL		CFM	MBTUH TOT	SYST KW
2TEH3F30A1+4AYTXVH-3	NOMINAL	1000	0.98	0.94
	LOW	875	0.96	0.91
	HIGH	1125	0.99	0.96
2TEH3F36A1+4AYTXVH-3	NOMINAL	1000	0.98	0.93
	LOW	875	0.96	0.90
	HIGH	1125	0.99	0.95
2TFB3F30B1+4AYTXVH-3	NOMINAL	1000	0.99	1.00
	LOW	875	0.98	0.97
	HIGH	1125	1.00	1.02
2TGB3F30A1+4AYTXVH-3	NOMINAL	1000	0.99	1.00
	LOW	875	0.98	0.97
	HIGH	1125	1.00	1.02
2TGB3F36A1+4AYTXVH-3	NOMINAL	1000	0.97	0.98
	LOW	875	0.96	0.95
	HIGH	1125	0.98	1.00
4TEC3F36A1	NOMINAL	1000	1.00	1.01
	LOW	875	0.98	0.98
	HIGH	1125	1.01	1.03
4TEE3F31A1	NOMINAL	1000	0.99	0.96
	LOW	875	0.97	0.93
	HIGH	1125	1.00	0.98
4TEE3F37A1	NOMINAL	1000	1.00	0.95
	LOW	875	0.99	0.93
	HIGH	1125	1.01	0.98
4TEP3F24A1	NOMINAL	1000	0.97	0.95
	LOW	875	0.96	0.92
	HIGH	1125	0.98	0.97
4TFE3F25B1	NOMINAL	1000	0.98	0.96
	LOW	875	0.97	0.93
	HIGH	1125	0.99	0.98
4TXCB031AC3	NOMINAL	1000	0.98	0.99
	LOW	875	0.97	0.96
	HIGH	1125	0.99	1.01
4TXCB031AC3+TDD060R9V3	NOMINAL	1000	0.96	0.91
	LOW	875	0.95	0.89
	HIGH	1125	0.97	0.93

CORRECTION FACTORS FOR OTHER COMBINATIONS (MULTIPLY DATA BY FACTOR)

INDOOR MODEL		CFM	MBTUH TOT	SYST KW
4TXCB031AC3+TDD080R9V3	NOMINAL	1000	0.96	0.90
	LOW	875	0.95	0.88
	HIGH	1125	0.97	0.93
4TXCB031AC3+TDD1B060A9H3	NOMINAL	1000	0.96	0.92
	LOW	875	0.95	0.90
	HIGH	1125	0.97	0.94
4TXCB031AC3+TDD1B080A9H3	NOMINAL	1000	0.96	0.92
	LOW	875	0.95	0.89
	HIGH	1125	0.97	0.94
4TXCB031AC3+TDX1B060A9H3	NOMINAL	1000	0.96	0.91
	LOW	875	0.95	0.89
	HIGH	1125	0.97	0.94
4TXCB031AC3+TDX1B080A9H3	NOMINAL	1000	0.96	0.91
	LOW	875	0.95	0.89
	HIGH	1125	0.97	0.94
4TXCB031AC3+TDX1C100A9H4	NOMINAL	1000	0.96	0.93
	LOW	875	0.94	0.90
	HIGH	1125	0.97	0.95
4TXCB031AC3+TDY060R9V3	NOMINAL	1000	0.96	0.91
	LOW	875	0.95	0.89
	HIGH	1125	0.97	0.94
4TXCB031AC3+TDY080R9V3	NOMINAL	1000	0.97	0.94
	LOW	875	0.96	0.92
	HIGH	1125	0.98	0.96
4TXCB031AC3+TDY100R9V4	NOMINAL	1000	0.97	0.95
	LOW	875	0.95	0.93
	HIGH	1125	0.98	0.98
4TXCB031AC3+TUD060R9V3	NOMINAL	1000	0.96	0.92
	LOW	875	0.95	0.90
	HIGH	1125	0.97	0.95
4TXCB031AC3+TUD080R9V3	NOMINAL	1000	0.96	0.91
	LOW	875	0.95	0.89
	HIGH	1125	0.97	0.93
4TXCB031AC3+TUD080R9V4	NOMINAL	1000	0.96	0.91
	LOW	875	0.95	0.88
	HIGH	1125	0.97	0.93
4TXCB031AC3+TUD100R9V3	NOMINAL	1000	0.96	0.92
	LOW	875	0.95	0.90
	HIGH	1125	0.97	0.95
4TXCB031AC3+TUD1B060A9H3	NOMINAL	1000	0.95	0.91
	LOW	875	0.94	0.88
	HIGH	1125	0.96	0.93
4TXCB031AC3+TUD1B080A9H3	NOMINAL	1000	0.95	0.90
	LOW	875	0.94	0.88
	HIGH	1125	0.96	0.92
4TXCB031AC3+TUD1B100A9H3	NOMINAL	1000	0.95	0.91
	LOW	875	0.94	0.89
	HIGH	1125	0.97	0.93
4TXCB031AC3+TUD1C080A9H4	NOMINAL	1000	0.95	0.91
	LOW	875	0.94	0.88
	HIGH	1125	0.96	0.93
4TXCB031AC3+TUX1B060A9H3	NOMINAL	1000	0.96	0.92
	LOW	875	0.95	0.90
	HIGH	1125	0.97	0.95
4TXCB031AC3+TUY060R9V3	NOMINAL	1000	0.96	0.93
	LOW	875	0.95	0.90
	HIGH	1125	0.97	0.95
4TXCB031AC3+TUY080R9V3	NOMINAL	1000	0.96	0.91
	LOW	875	0.95	0.89
	HIGH	1125	0.97	0.93
4TXCB031AC3+TUY100R9V4	NOMINAL	1000	0.96	0.94
	LOW	875	0.95	0.92
	HIGH	1125	0.97	0.96

Performance Data
Heating

4TWB3030A1

CORRECTION FACTORS FOR OTHER COMBINATIONS (MULTIPLY DATA BY FACTOR)

INDOOR MODEL		CFM	MBTUH TOT	SYST KW
4TXCB031AS3+TDD060R9V3	NOMINAL	1000	0.95	0.94
	LOW	875	0.94	0.92
	HIGH	1125	0.97	0.96
4TXCB031AS3+TDD080R9V3	NOMINAL	1000	0.96	0.93
	LOW	875	0.94	0.91
	HIGH	1125	0.97	0.96
4TXCB031AS3+TDD1B060A9H3	NOMINAL	1000	0.96	0.92
	LOW	875	0.94	0.90
	HIGH	1125	0.97	0.95
4TXCB031AS3+TDD1B080A9H3	NOMINAL	1000	0.95	0.92
	LOW	875	0.94	0.90
	HIGH	1125	0.96	0.94
4TXCB031AS3+TDX1B060A9H3	NOMINAL	1000	0.96	0.95
	LOW	875	0.95	0.93
	HIGH	1125	0.97	0.98
4TXCB031AS3+TDX1B080A9H3	NOMINAL	1000	0.95	0.92
	LOW	875	0.94	0.89
	HIGH	1125	0.96	0.94
4TXCB031AS3+TDY060R9V3	NOMINAL	1000	0.96	0.93
	LOW	875	0.95	0.90
	HIGH	1125	0.97	0.95
4TXCB031AS3+TDY080R9V3	NOMINAL	1000	0.96	0.94
	LOW	875	0.95	0.92
	HIGH	1125	0.97	0.97
4TXCB031AS3+TUD060R9V3	NOMINAL	1000	0.96	0.96
	LOW	875	0.95	0.94
	HIGH	1125	0.97	0.99
4TXCB031AS3+TUD080R9V3	NOMINAL	1000	0.95	0.94
	LOW	875	0.94	0.92
	HIGH	1125	0.97	0.97
4TXCB031AS3+TUD1B060A9H3	NOMINAL	1000	0.95	0.91
	LOW	875	0.94	0.89
	HIGH	1125	0.96	0.93
4TXCB031AS3+TUD1B080A9H3	NOMINAL	1000	0.95	0.90
	LOW	875	0.93	0.88
	HIGH	1125	0.96	0.93
4TXCB031AS3+TUX1B060A9H3	NOMINAL	1000	0.95	0.93
	LOW	875	0.94	0.91
	HIGH	1125	0.96	0.95
4TXCB031AS3+TUX1B080A9H3	NOMINAL	1000	0.96	0.95
	LOW	875	0.94	0.92
	HIGH	1125	0.97	0.97
4TXCB031AS3+TUY060R9V3	NOMINAL	1000	0.96	0.93
	LOW	875	0.94	0.91
	HIGH	1125	0.97	0.95
4TXCB031AS3+TUY080R9V3	NOMINAL	1000	0.95	0.92
	LOW	875	0.94	0.89
	HIGH	1125	0.96	0.94
4TXFH033AS3+TDD060R9V3	NOMINAL	1000	0.96	0.91
	LOW	875	0.95	0.88
	HIGH	1125	0.97	0.93
4TXFH033AS3+TDD080R9V3	NOMINAL	1000	0.96	0.90
	LOW	875	0.95	0.88
	HIGH	1125	0.97	0.92
4TXFH033AS3+TDD1B060A9H3	NOMINAL	1000	0.96	0.91
	LOW	875	0.94	0.89
	HIGH	1125	0.97	0.94
4TXFH033AS3+TDD1B080A9H3	NOMINAL	1000	0.95	0.91
	LOW	875	0.94	0.89
	HIGH	1125	0.96	0.93
4TXFH033AS3+TDX1B060A9H3	NOMINAL	1000	0.96	0.91
	LOW	875	0.94	0.88
	HIGH	1125	0.97	0.93

CORRECTION FACTORS FOR OTHER COMBINATIONS (MULTIPLY DATA BY FACTOR)

INDOOR MODEL		CFM	MBTUH TOT	SYST KW
4TXFH033AS3+TDX1B080A9H3	NOMINAL	1000	0.96	0.91
	LOW	875	0.94	0.89
	HIGH	1125	0.97	0.93
4TXFH033AS3+TDY060R9V3	NOMINAL	1000	0.96	0.91
	LOW	875	0.95	0.89
	HIGH	1125	0.97	0.93
4TXFH033AS3+TDY080R9V3	NOMINAL	1000	0.96	0.93
	LOW	875	0.95	0.90
	HIGH	1125	0.97	0.95
4TXFH033AS3+TDY100R9V4	NOMINAL	1000	0.96	0.94
	LOW	875	0.95	0.92
	HIGH	1125	0.97	0.97
4TXFH033AS3+TUD060R9V3	NOMINAL	1000	0.96	0.91
	LOW	875	0.94	0.89
	HIGH	1125	0.97	0.94
4TXFH033AS3+TUD080R9V3	NOMINAL	1000	0.96	0.90
	LOW	875	0.94	0.88
	HIGH	1125	0.97	0.93
4TXFH033AS3+TUD080R9V4	NOMINAL	1000	0.95	0.89
	LOW	875	0.94	0.87
	HIGH	1125	0.96	0.92
4TXFH033AS3+TUD100R9V3	NOMINAL	1000	0.96	0.91
	LOW	875	0.95	0.89
	HIGH	1125	0.97	0.93
4TXFH033AS3+TUD1B060A9H3	NOMINAL	1000	0.96	0.91
	LOW	875	0.94	0.89
	HIGH	1125	0.97	0.93
4TXFH033AS3+TUD1B080A9H3	NOMINAL	1000	0.95	0.90
	LOW	875	0.94	0.88
	HIGH	1125	0.96	0.92
4TXFH033AS3+TUD1B100A9H3	NOMINAL	1000	0.96	0.91
	LOW	875	0.94	0.89
	HIGH	1125	0.97	0.93
4TXFH033AS3+TUX1B060A9H3	NOMINAL	1000	0.96	0.92
	LOW	875	0.94	0.90
	HIGH	1125	0.97	0.94
4TXFH033AS3+TUY060R9V3	NOMINAL	1000	0.96	0.91
	LOW	875	0.95	0.89
	HIGH	1125	0.97	0.94
4TXFH033AS3+TUY080R9V3	NOMINAL	1000	0.96	0.90
	LOW	875	0.94	0.88
	HIGH	1125	0.97	0.93
4TXFH033AS3+TUY100R9V4	NOMINAL	1000	0.96	0.93
	LOW	875	0.95	0.91
	HIGH	1125	0.97	0.96
TWE042C14+4AYTXVH-3	NOMINAL	1000	0.98	0.99
	LOW	875	0.96	0.97
	HIGH	1125	0.99	1.02
TXH033A4+4AYTXVH-3+TDD060R9V3	NOMINAL	1000	0.96	0.92
	LOW	875	0.94	0.90
	HIGH	1125	0.97	0.94
TXH033A4+4AYTXVH-3+TDD080R9V3	NOMINAL	1000	0.95	0.92
	LOW	875	0.94	0.89
	HIGH	1125	0.97	0.94
TXH033A4+4AYTXVH-3+TDD1B060A9H3	NOMINAL	1000	0.96	0.91
	LOW	875	0.94	0.89
	HIGH	1125	0.97	0.94
TXH033A4+4AYTXVH-3+TDD1B080A9H3	NOMINAL	1000	0.95	0.91
	LOW	875	0.94	0.89
	HIGH	1125	0.96	0.93
TXH033A4+4AYTXVH-3+TDX1B060A9H3	NOMINAL	1000	0.96	0.91
	LOW	875	0.94	0.88
	HIGH	1125	0.97	0.93

Performance Data
Heating

4TWB3030A1

CORRECTION FACTORS FOR OTHER COMBINATIONS (MULTIPLY DATA BY FACTOR)

INDOOR MODEL		CFM	MBTUH TOT	SYST KW
TXH033A4+4AYTXVH-3+TDX1B080A9H3	NOMINAL	1000	0.96	0.91
	LOW	875	0.94	0.89
	HIGH	1125	0.97	0.93
TXH033A4+4AYTXVH-3+TDY060R9V3	NOMINAL	1000	0.96	0.91
	LOW	875	0.95	0.89
	HIGH	1125	0.97	0.93
TXH033A4+4AYTXVH-3+TDY080R9V3	NOMINAL	1000	0.96	0.93
	LOW	875	0.95	0.90
	HIGH	1125	0.97	0.95
TXH033A4+4AYTXVH-3+TUD060R9V3	NOMINAL	1000	0.97	0.95
	LOW	875	0.95	0.92
	HIGH	1125	0.98	0.97
TXH033A4+4AYTXVH-3+TUD080R9V3	NOMINAL	1000	0.96	0.93
	LOW	875	0.95	0.91
	HIGH	1125	0.97	0.95
TXH033A4+4AYTXVH-3+TUD1A040A9H2	NOMINAL	1000	0.96	0.91
	LOW	875	0.95	0.89
	HIGH	1125	0.97	0.93

CORRECTION FACTORS FOR OTHER COMBINATIONS (MULTIPLY DATA BY FACTOR)

INDOOR MODEL		CFM	MBTUH TOT	SYST KW
TXH033A4+4AYTXVH-3+TUD1B060A9H3	NOMINAL	1000	0.96	0.91
	LOW	875	0.94	0.89
	HIGH	1125	0.97	0.93
TXH033A4+4AYTXVH-3+TUD1B080A9H3	NOMINAL	1000	0.95	0.90
	LOW	875	0.94	0.88
	HIGH	1125	0.96	0.92
TXH033A4+4AYTXVH-3+TUX1B040A9H2	NOMINAL	1000	0.96	0.91
	LOW	875	0.94	0.89
	HIGH	1125	0.97	0.93
TXH033A4+4AYTXVH-3+TUX1B060A9H3	NOMINAL	1000	0.96	0.92
	LOW	875	0.94	0.90
	HIGH	1125	0.97	0.94
TXH033A4+4AYTXVH-3+TUY060R9V3	NOMINAL	1000	0.96	0.91
	LOW	875	0.95	0.89
	HIGH	1125	0.97	0.94
TXH033A4+4AYTXVH-3+TUY080R9V3	NOMINAL	1000	0.96	0.90
	LOW	875	0.94	0.88
	HIGH	1125	0.97	0.93

Performance Data
Heating

4TWB3036A1

4TWB3036A1 WITH 4TEC3F36A1 AT 1200 CFM

O.D. TEMP. F.	HEATING CAPACITY MBH AT INDOOR DRY BULB TEMP. 70	75	80	TOTAL POWER IN KILOWATTS AT INDOOR DRY BULB TEMP. 70	75	80
2	13.66	13.52	13.40	2.38	2.45	2.52
7	15.99	15.83	15.68	2.45	2.52	2.60
12	18.31	18.13	17.97	2.52	2.60	2.67
17	20.64	20.43	20.25	2.60	2.67	2.75
22	21.45	21.24	21.05	2.61	2.69	2.77
27	22.27	22.04	21.84	2.63	2.71	2.79
32	23.08	22.85	22.64	2.65	2.73	2.80
37	25.41	25.15	24.92	2.72	2.80	2.88
42	30.00	29.70	29.43	2.88	2.96	3.05
47	34.60	34.25	33.94	3.04	3.13	3.22
52	36.93	36.56	36.22	3.11	3.20	3.29
57	39.25	38.86	38.51	3.18	3.28	3.37
62	41.58	41.16	40.79	3.25	3.35	3.45
67	43.91	43.47	43.07	3.33	3.43	3.53
72	46.23	45.77	45.35	3.40	3.50	3.60

CORRECTION FACTORS FOR OTHER AIRFLOWS (MULTIPLY DATA BY FACTOR)

	AIRFLOW	TOTAL CAPACITY	SENSIBLE CAPACITY
LOW	1050	0.99	0.98
HIGH	1350	1.01	1.03

NOTE: ALL TABLES ABOVE ARE AT ARI RATING CONDITIONS RATED WITH 25 FEET OF REFRIGERANT LINES.

CORRECTION FACTORS FOR OTHER COMBINATIONS (MULTIPLY DATA BY FACTOR)

INDOOR MODEL		CFM	MBTUH TOT	SYST KW
2TEH3F36A1+4AYTXVH-3	NOMINAL	1200	0.97	0.94
	LOW	1050	0.96	0.91
	HIGH	1350	0.98	0.96
2TGB3F36A1+4AYTXVH-3	NOMINAL	1200	1.00	0.99
	LOW	1050	0.99	0.96
	HIGH	1350	1.01	1.01
2TGB3F42A1+4AYTXVH-3	NOMINAL	1200	0.98	0.97
	LOW	1050	0.96	0.94
	HIGH	1350	0.99	0.99
4TEE3F31A1	NOMINAL	1200	0.98	0.97
	LOW	1050	0.97	0.94
	HIGH	1350	0.99	0.99
4TEE3F37A1	NOMINAL	1200	0.99	0.93
	LOW	1050	0.97	0.91
	HIGH	1350	1.00	0.95
4TXCB031AS3	NOMINAL	1200	0.97	0.98
	LOW	1050	0.96	0.96
	HIGH	1350	0.98	1.01
4TXCB031AS3+TDD060R9V3	NOMINAL	1200	0.96	0.96
	LOW	1050	0.95	0.94
	HIGH	1350	0.97	0.98
4TXCB031AS3+TDD080R9V3	NOMINAL	1200	0.96	0.94
	LOW	1050	0.95	0.92
	HIGH	1350	0.97	0.97
4TXCB031AS3+TDD1B060A9H3	NOMINAL	1200	0.96	0.93
	LOW	1050	0.95	0.91
	HIGH	1350	0.97	0.95
4TXCB031AS3+TDD1B080A9H3	NOMINAL	1200	0.96	0.93
	LOW	1050	0.95	0.90
	HIGH	1350	0.97	0.95
4TXCB031AS3+TDX1B060A9H3	NOMINAL	1200	0.96	0.93
	LOW	1050	0.95	0.91
	HIGH	1350	0.97	0.95
4TXCB031AS3+TDX1B080A9H3	NOMINAL	1200	0.97	0.96
	LOW	1050	0.95	0.94
	HIGH	1350	0.98	0.99

CORRECTION FACTORS FOR OTHER COMBINATIONS (MULTIPLY DATA BY FACTOR)

INDOOR MODEL		CFM	MBTUH TOT	SYST KW
4TXCB031AS3+TDY060R9V3	NOMINAL	1200	0.97	0.95
	LOW	1050	0.95	0.93
	HIGH	1350	0.98	0.97
4TXCB031AS3+TDY080R9V3	NOMINAL	1200	0.97	0.96
	LOW	1050	0.95	0.94
	HIGH	1350	0.98	0.99
4TXCB031AS3+TUD060R9V3	NOMINAL	1200	0.97	0.97
	LOW	1050	0.95	0.95
	HIGH	1350	0.98	1.00
4TXCB031AS3+TUD080R9V3	NOMINAL	1200	0.97	0.97
	LOW	1050	0.95	0.95
	HIGH	1350	0.98	0.99
4TXCB031AS3+TUD1B060A9H3	NOMINAL	1200	0.96	0.92
	LOW	1050	0.94	0.89
	HIGH	1350	0.97	0.94
4TXCB031AS3+TUD1B080A9H3	NOMINAL	1200	0.96	0.91
	LOW	1050	0.94	0.89
	HIGH	1350	0.97	0.93
4TXCB031AS3+TUX1B060A9H3	NOMINAL	1200	0.96	0.93
	LOW	1050	0.95	0.91
	HIGH	1350	0.97	0.96
4TXCB031AS3+TUX1B080A9H3	NOMINAL	1200	0.96	0.92
	LOW	1050	0.95	0.90
	HIGH	1350	0.97	0.95
4TXCB031AS3+TUY060R9V3	NOMINAL	1200	0.97	0.95
	LOW	1050	0.95	0.93
	HIGH	1350	0.98	0.98
4TXCB031AS3+TUY080R9V3	NOMINAL	1200	0.96	0.94
	LOW	1050	0.95	0.91
	HIGH	1350	0.97	0.96
4TXCB036AC3	NOMINAL	1200	0.99	0.98
	LOW	1050	0.98	0.96
	HIGH	1350	1.00	1.00
4TXCB036AC3+TDD060R9V3	NOMINAL	1200	0.98	0.93
	LOW	1050	0.97	0.90
	HIGH	1350	0.99	0.95
4TXCB036AC3+TDD080R9V3	NOMINAL	1200	0.98	0.92
	LOW	1050	0.96	0.89
	HIGH	1350	0.99	0.94
4TXCB036AC3+TDD1B060A9H3	NOMINAL	1200	0.97	0.92
	LOW	1050	0.96	0.90
	HIGH	1350	0.98	0.95
4TXCB036AC3+TDD1B080A9H3	NOMINAL	1200	0.97	0.92
	LOW	1050	0.96	0.90
	HIGH	1350	0.98	0.94
4TXCB036AC3+TDX1B060A9H3	NOMINAL	1200	0.98	0.93
	LOW	1050	0.96	0.90
	HIGH	1350	0.99	0.95
4TXCB036AC3+TDX1B080A9H3	NOMINAL	1200	0.98	0.96
	LOW	1050	0.97	0.93
	HIGH	1350	0.99	0.98
4TXCB036AC3+TDX1C100A9H4	NOMINAL	1200	0.97	0.91
	LOW	1050	0.96	0.88
	HIGH	1350	0.98	0.93
4TXCB036AC3+TDY060R9V3	NOMINAL	1200	0.98	0.94
	LOW	1050	0.96	0.92
	HIGH	1350	0.99	0.96
4TXCB036AC3+TDY080R9V3	NOMINAL	1200	0.99	0.96
	LOW	1050	0.97	0.94
	HIGH	1350	1.00	0.99
4TXCB036AC3+TDY100R9V4	NOMINAL	1200	0.98	0.94
	LOW	1050	0.97	0.91
	HIGH	1350	0.99	0.96

Performance Data
Heating

4TWB3036A1

CORRECTION FACTORS FOR OTHER COMBINATIONS (MULTIPLY DATA BY FACTOR)

INDOOR MODEL		CFM	MBTUH TOT	SYST KW
4TXCB036AC3+TUD060R9V3	NOMINAL	1200	0.98	0.94
	LOW	1050	0.97	0.92
	HIGH	1350	0.99	0.97
4TXCB036AC3+TUD080R9V3	NOMINAL	1200	0.98	0.93
	LOW	1050	0.97	0.91
	HIGH	1350	0.99	0.95
4TXCB036AC3+TUD080R9V4	NOMINAL	1200	0.97	0.90
	LOW	1050	0.96	0.88
	HIGH	1350	0.98	0.93
4TXCB036AC3+TUD100R9V3	NOMINAL	1200	0.98	0.95
	LOW	1050	0.97	0.93
	HIGH	1350	0.99	0.97
4TXCB036AC3+TUD1B060A9H3	NOMINAL	1200	0.97	0.91
	LOW	1050	0.96	0.89
	HIGH	1350	0.98	0.94
4TXCB036AC3+TUD1B080A9H3	NOMINAL	1200	0.97	0.91
	LOW	1050	0.96	0.89
	HIGH	1350	0.98	0.93
4TXCB036AC3+TUD1B100A9H3	NOMINAL	1200	0.97	0.91
	LOW	1050	0.96	0.89
	HIGH	1350	0.98	0.94
4TXCB036AC3+TUD1C080A9H4	NOMINAL	1200	0.97	0.90
	LOW	1050	0.95	0.88
	HIGH	1350	0.98	0.92
4TXCB036AC3+TUX1B060A9H3	NOMINAL	1200	0.98	0.94
	LOW	1050	0.97	0.91
	HIGH	1350	0.99	0.96
4TXCB036AC3+TUX1B080A9H3	NOMINAL	1200	0.97	0.92
	LOW	1050	0.96	0.90
	HIGH	1350	0.98	0.94
4TXCB036AC3+TUX1C100A9H4	NOMINAL	1200	0.97	0.91
	LOW	1050	0.96	0.89
	HIGH	1350	0.98	0.93
4TXCB036AC3+TUY060R9V3	NOMINAL	1200	0.98	0.95
	LOW	1050	0.97	0.92
	HIGH	1350	0.99	0.97
4TXCB036AC3+TUY080R9V3	NOMINAL	1200	0.98	0.93
	LOW	1050	0.96	0.91
	HIGH	1350	0.99	0.95
4TXCB036AC3+TUY100R9V4	NOMINAL	1200	0.98	0.93
	LOW	1050	0.97	0.90
	HIGH	1350	0.99	0.95
4TXCB042AC3+TDD060R9V3	NOMINAL	1200	0.96	0.92
	LOW	1050	0.95	0.90
	HIGH	1350	0.97	0.94
4TXCB042AC3+TDD080R9V3	NOMINAL	1200	0.96	0.91
	LOW	1050	0.95	0.89
	HIGH	1350	0.97	0.93
4TXCB042AC3+TDD1B060A9H3	NOMINAL	1200	0.96	0.94
	LOW	1050	0.95	0.92
	HIGH	1350	0.97	0.97
4TXCB042AC3+TDD1B080A9H3	NOMINAL	1200	0.96	0.94
	LOW	1050	0.95	0.92
	HIGH	1350	0.97	0.96
4TXCB042AC3+TDX1B060A9H3	NOMINAL	1200	0.96	0.95
	LOW	1050	0.95	0.92
	HIGH	1350	0.97	0.97
4TXCB042AC3+TDX1B080A9H3	NOMINAL	1200	0.96	0.95
	LOW	1050	0.95	0.93
	HIGH	1350	0.97	0.97
4TXCB042AC3+TDX1C100A9H4	NOMINAL	1200	0.95	0.90
	LOW	1050	0.94	0.88
	HIGH	1350	0.96	0.93

CORRECTION FACTORS FOR OTHER COMBINATIONS (MULTIPLY DATA BY FACTOR)

INDOOR MODEL		CFM	MBTUH TOT	SYST KW
4TXCB042AC3+TDY060R9V3	NOMINAL	1200	0.97	0.94
	LOW	1050	0.95	0.91
	HIGH	1350	0.98	0.96
4TXCB042AC3+TDY080R9V3	NOMINAL	1200	0.97	0.96
	LOW	1050	0.96	0.93
	HIGH	1350	0.98	0.98
4TXCB042AC3+TDY100R9V4	NOMINAL	1200	0.97	0.93
	LOW	1050	0.95	0.91
	HIGH	1350	0.98	0.96
4TXCB042AC3+TUD060R9V3	NOMINAL	1200	0.97	0.94
	LOW	1050	0.95	0.92
	HIGH	1350	0.98	0.97
4TXCB042AC3+TUD080R9V3	NOMINAL	1200	0.96	0.92
	LOW	1050	0.95	0.90
	HIGH	1350	0.97	0.95
4TXCB042AC3+TUD080R9V4	NOMINAL	1200	0.96	0.90
	LOW	1050	0.95	0.88
	HIGH	1350	0.97	0.93
4TXCB042AC3+TUD100R9V3	NOMINAL	1200	0.96	0.94
	LOW	1050	0.95	0.92
	HIGH	1350	0.97	0.96
4TXCB042AC3+TUD1B060A9H3	NOMINAL	1200	0.96	0.94
	LOW	1050	0.95	0.91
	HIGH	1350	0.97	0.96
4TXCB042AC3+TUD1B080A9H3	NOMINAL	1200	0.95	0.91
	LOW	1050	0.94	0.89
	HIGH	1350	0.97	0.94
4TXCB042AC3+TUD1B100A9H3	NOMINAL	1200	0.96	0.93
	LOW	1050	0.95	0.91
	HIGH	1350	0.97	0.95
4TXCB042AC3+TUX1B060A9H3	NOMINAL	1200	0.97	0.96
	LOW	1050	0.96	0.94
	HIGH	1350	0.98	0.99
4TXCB042AC3+TUX1B080A9H3	NOMINAL	1200	0.96	0.93
	LOW	1050	0.95	0.91
	HIGH	1350	0.97	0.95
4TXCB042AC3+TUY060R9V3	NOMINAL	1200	0.97	0.94
	LOW	1050	0.95	0.92
	HIGH	1350	0.98	0.97
4TXCB042AC3+TUY080R9V3	NOMINAL	1200	0.96	0.93
	LOW	1050	0.95	0.90
	HIGH	1350	0.97	0.95
4TXCB042AC3+TUY100R9V4	NOMINAL	1200	0.96	0.92
	LOW	1050	0.95	0.90
	HIGH	1350	0.97	0.94
4TXCC037AC3	NOMINAL	1200	0.99	0.98
	LOW	1050	0.98	0.96
	HIGH	1350	1.00	1.00
4TXCC037AC3+TDD060R9V3	NOMINAL	1200	0.97	0.92
	LOW	1050	0.96	0.89
	HIGH	1350	0.98	0.94
4TXCC037AC3+TDD080R9V3	NOMINAL	1200	0.98	0.91
	LOW	1050	0.96	0.89
	HIGH	1350	0.99	0.94
4TXCC037AC3+TDD1B060A9H3	NOMINAL	1200	0.98	0.92
	LOW	1050	0.96	0.90
	HIGH	1350	0.99	0.95
4TXCC037AC3+TDD1B080A9H3	NOMINAL	1200	0.98	0.92
	LOW	1050	0.96	0.90
	HIGH	1350	0.99	0.95
4TXCC037AC3+TDX1B060A9H3	NOMINAL	1200	0.97	0.92
	LOW	1050	0.96	0.90
	HIGH	1350	0.98	0.94

Performance Data
Heating

4TWB3036A1

CORRECTION FACTORS FOR OTHER COMBINATIONS (MULTIPLY DATA BY FACTOR)

INDOOR MODEL		CFM	MBTUH TOT	SYST KW
4TXCC037AC3+TDX1B080A9H3	NOMINAL	1200	0.98	0.95
	LOW	1050	0.96	0.93
	HIGH	1350	0.99	0.97
4TXCC037AC3+TDX1C100A9H4	NOMINAL	1200	0.97	0.91
	LOW	1050	0.96	0.88
	HIGH	1350	0.98	0.93
4TXCC037AC3+TDY060R9V3	NOMINAL	1200	0.98	0.94
	LOW	1050	0.97	0.91
	HIGH	1350	0.99	0.96
4TXCC037AC3+TDY080R9V3	NOMINAL	1200	0.98	0.95
	LOW	1050	0.97	0.93
	HIGH	1350	0.99	0.98
4TXCC037AC3+TDY100R9V4	NOMINAL	1200	0.98	0.93
	LOW	1050	0.97	0.91
	HIGH	1350	0.99	0.95
4TXCC037AC3+TUD060R9V3	NOMINAL	1200	0.98	0.94
	LOW	1050	0.97	0.92
	HIGH	1350	0.99	0.96
4TXCC037AC3+TUD080R9V3	NOMINAL	1200	0.98	0.92
	LOW	1050	0.97	0.90
	HIGH	1350	0.99	0.95
4TXCC037AC3+TUD080R9V4	NOMINAL	1200	0.97	0.90
	LOW	1050	0.96	0.88
	HIGH	1350	0.98	0.92
4TXCC037AC3+TUD100R9V3	NOMINAL	1200	0.98	0.94
	LOW	1050	0.96	0.91
	HIGH	1350	0.99	0.96
4TXCC037AC3+TUD1B060A9H3	NOMINAL	1200	0.97	0.91
	LOW	1050	0.96	0.89
	HIGH	1350	0.98	0.94
4TXCC037AC3+TUD1B080A9H3	NOMINAL	1200	0.97	0.90
	LOW	1050	0.96	0.88
	HIGH	1350	0.98	0.93
4TXCC037AC3+TUD1B100A9H3	NOMINAL	1200	0.97	0.91
	LOW	1050	0.96	0.89
	HIGH	1350	0.98	0.93
4TXCC037AC3+TUD1C080A9H4	NOMINAL	1200	0.97	0.90
	LOW	1050	0.95	0.87
	HIGH	1350	0.98	0.92
4TXCC037AC3+TUX1B060A9H3	NOMINAL	1200	0.98	0.93
	LOW	1050	0.96	0.91
	HIGH	1350	0.99	0.95
4TXCC037AC3+TUX1B080A9H3	NOMINAL	1200	0.98	0.92
	LOW	1050	0.96	0.90
	HIGH	1350	0.99	0.94
4TXCC037AC3+TUX1C100A9H4	NOMINAL	1200	0.97	0.91
	LOW	1050	0.95	0.88
	HIGH	1350	0.98	0.93
4TXCC037AC3+TUY060R9V3	NOMINAL	1200	0.98	0.94
	LOW	1050	0.97	0.92
	HIGH	1350	0.99	0.96
4TXCC037AC3+TUY080R9V3	NOMINAL	1200	0.98	0.92
	LOW	1050	0.96	0.90
	HIGH	1350	0.99	0.95
4TXCC037AC3+TUY100R9V4	NOMINAL	1200	0.97	0.91
	LOW	1050	0.96	0.89
	HIGH	1350	0.98	0.94
4TXCC043AC3+TDD060R9V3	NOMINAL	1200	0.96	0.91
	LOW	1050	0.94	0.89
	HIGH	1350	0.97	0.93
4TXCC043AC3+TDD080R9V3	NOMINAL	1200	0.96	0.91
	LOW	1050	0.95	0.88
	HIGH	1350	0.97	0.93

CORRECTION FACTORS FOR OTHER COMBINATIONS (MULTIPLY DATA BY FACTOR)

INDOOR MODEL		CFM	MBTUH TOT	SYST KW
4TXCC043AC3+TDD1B060A9H3	NOMINAL	1200	0.96	0.93
	LOW	1050	0.95	0.91
	HIGH	1350	0.97	0.96
4TXCC043AC3+TDD1B080A9H3	NOMINAL	1200	0.96	0.93
	LOW	1050	0.95	0.91
	HIGH	1350	0.97	0.96
4TXCC043AC3+TDX1B060A9H3	NOMINAL	1200	0.96	0.95
	LOW	1050	0.95	0.92
	HIGH	1350	0.97	0.97
4TXCC043AC3+TDX1B080A9H3	NOMINAL	1200	0.97	0.95
	LOW	1050	0.95	0.92
	HIGH	1350	0.98	0.97
4TXCC043AC3+TDX1C100A9H4	NOMINAL	1200	0.95	0.90
	LOW	1050	0.93	0.88
	HIGH	1350	0.96	0.92
4TXCC043AC3+TDY060R9V3	NOMINAL	1200	0.96	0.93
	LOW	1050	0.95	0.90
	HIGH	1350	0.97	0.95
4TXCC043AC3+TDY080R9V3	NOMINAL	1200	0.97	0.95
	LOW	1050	0.96	0.93
	HIGH	1350	0.98	0.98
4TXCC043AC3+TDY100R9V4	NOMINAL	1200	0.96	0.92
	LOW	1050	0.95	0.90
	HIGH	1350	0.97	0.95
4TXCC043AC3+TUD060R9V3	NOMINAL	1200	0.96	0.93
	LOW	1050	0.95	0.91
	HIGH	1350	0.97	0.95
4TXCC043AC3+TUD080R9V3	NOMINAL	1200	0.96	0.92
	LOW	1050	0.95	0.89
	HIGH	1350	0.97	0.94
4TXCC043AC3+TUD080R9V4	NOMINAL	1200	0.96	0.90
	LOW	1050	0.95	0.88
	HIGH	1350	0.97	0.92
4TXCC043AC3+TUD100R9V3	NOMINAL	1200	0.97	0.94
	LOW	1050	0.95	0.91
	HIGH	1350	0.98	0.96
4TXCC043AC3+TUD1B060A9H3	NOMINAL	1200	0.96	0.94
	LOW	1050	0.95	0.91
	HIGH	1350	0.97	0.96
4TXCC043AC3+TUD1B080A9H3	NOMINAL	1200	0.95	0.91
	LOW	1050	0.94	0.88
	HIGH	1350	0.96	0.93
4TXCC043AC3+TUD1B100A9H3	NOMINAL	1200	0.96	0.92
	LOW	1050	0.94	0.90
	HIGH	1350	0.97	0.94
4TXCC043AC3+TUD1C080A9H4	NOMINAL	1200	0.95	0.89
	LOW	1050	0.94	0.87
	HIGH	1350	0.96	0.91
4TXCC043AC3+TUX1B060A9H3	NOMINAL	1200	0.96	0.93
	LOW	1050	0.95	0.90
	HIGH	1350	0.97	0.95
4TXCC043AC3+TUX1B080A9H3	NOMINAL	1200	0.96	0.93
	LOW	1050	0.94	0.90
	HIGH	1350	0.97	0.95
4TXCC043AC3+TUX1C100A9H4	NOMINAL	1200	0.95	0.90
	LOW	1050	0.94	0.88
	HIGH	1350	0.97	0.92
4TXCC043AC3+TUY060R9V3	NOMINAL	1200	0.96	0.93
	LOW	1050	0.95	0.91
	HIGH	1350	0.97	0.96
4TXCC043AC3+TUY080R9V3	NOMINAL	1200	0.96	0.92
	LOW	1050	0.95	0.90
	HIGH	1350	0.97	0.94

Performance Data
Heating

4TWB3036A1

CORRECTION FACTORS FOR OTHER COMBINATIONS (MULTIPLY DATA BY FACTOR)

INDOOR MODEL		CFM	MBTUH TOT	SYST KW
4TXCC043AC3+TUY100R9V4	NOMINAL	1200	0.96	0.91
	LOW	1050	0.95	0.89
	HIGH	1350	0.97	0.94
4TXFH033AS3+TDD060R9V3	NOMINAL	1200	0.96	0.91
	LOW	1050	0.94	0.89
	HIGH	1350	0.97	0.93
4TXFH033AS3+TDD080R9V3	NOMINAL	1200	0.96	0.91
	LOW	1050	0.95	0.88
	HIGH	1350	0.97	0.93
4TXFH033AS3+TDD1B060A9H3	NOMINAL	1200	0.96	0.92
	LOW	1050	0.94	0.89
	HIGH	1350	0.97	0.94
4TXFH033AS3+TDD1B080A9H3	NOMINAL	1200	0.96	0.92
	LOW	1050	0.95	0.89
	HIGH	1350	0.97	0.94
4TXFH033AS3+TDX1B060A9H3	NOMINAL	1200	0.96	0.92
	LOW	1050	0.95	0.90
	HIGH	1350	0.97	0.94
4TXFH033AS3+TDX1B080A9H3	NOMINAL	1200	0.96	0.91
	LOW	1050	0.95	0.88
	HIGH	1350	0.97	0.93
4TXFH033AS3+TDX1C100A9H4	NOMINAL	1200	0.96	0.90
	LOW	1050	0.94	0.88
	HIGH	1350	0.97	0.93
4TXFH033AS3+TDY060R9V3	NOMINAL	1200	0.96	0.93
	LOW	1050	0.95	0.90
	HIGH	1350	0.97	0.95
4TXFH033AS3+TDY080R9V3	NOMINAL	1200	0.97	0.95
	LOW	1050	0.96	0.92
	HIGH	1350	0.98	0.97
4TXFH033AS3+TDY100R9V4	NOMINAL	1200	0.96	0.92
	LOW	1050	0.95	0.90
	HIGH	1350	0.97	0.94
4TXFH033AS3+TUD060R9V3	NOMINAL	1200	0.96	0.93
	LOW	1050	0.95	0.91
	HIGH	1350	0.97	0.95
4TXFH033AS3+TUD080R9V3	NOMINAL	1200	0.96	0.91
	LOW	1050	0.95	0.89
	HIGH	1350	0.97	0.94
4TXFH033AS3+TUD080R9V4	NOMINAL	1200	0.96	0.90
	LOW	1050	0.95	0.88
	HIGH	1350	0.97	0.92
4TXFH033AS3+TUD100R9V3	NOMINAL	1200	0.97	0.94
	LOW	1050	0.95	0.91
	HIGH	1350	0.98	0.96
4TXFH033AS3+TUD1B060A9H3	NOMINAL	1200	0.95	0.91
	LOW	1050	0.94	0.88
	HIGH	1350	0.96	0.93
4TXFH033AS3+TUD1B080A9H3	NOMINAL	1200	0.96	0.90
	LOW	1050	0.94	0.88
	HIGH	1350	0.97	0.92
4TXFH033AS3+TUD1B100A9H3	NOMINAL	1200	0.96	0.91
	LOW	1050	0.94	0.88
	HIGH	1350	0.97	0.93
4TXFH033AS3+TUD1C080A9H4	NOMINAL	1200	0.95	0.88
	LOW	1050	0.94	0.86
	HIGH	1350	0.97	0.91
4TXFH033AS3+TUX1B060A9H3	NOMINAL	1200	0.96	0.93
	LOW	1050	0.95	0.90
	HIGH	1350	0.97	0.95
4TXFH033AS3+TUX1B080A9H3	NOMINAL	1200	0.96	0.91
	LOW	1050	0.94	0.89
	HIGH	1350	0.97	0.94

CORRECTION FACTORS FOR OTHER COMBINATIONS (MULTIPLY DATA BY FACTOR)

INDOOR MODEL		CFM	MBTUH TOT	SYST KW
4TXFH033AS3+TUX1C100A9H4	NOMINAL	1200	0.95	0.90
	LOW	1050	0.94	0.88
	HIGH	1350	0.96	0.92
4TXFH033AS3+TUY060R9V3	NOMINAL	1200	0.96	0.93
	LOW	1050	0.95	0.91
	HIGH	1350	0.97	0.95
4TXFH033AS3+TUY080R9V3	NOMINAL	1200	0.96	0.92
	LOW	1050	0.95	0.90
	HIGH	1350	0.97	0.94
4TXFH033AS3+TUY100R9V4	NOMINAL	1200	0.96	0.91
	LOW	1050	0.95	0.89
	HIGH	1350	0.97	0.94
4TXFH041AS3	NOMINAL	1200	1.00	0.98
	LOW	1050	0.98	0.96
	HIGH	1350	1.01	1.01
4TXFH041AS3+TDD060R9V3	NOMINAL	1200	0.98	0.92
	LOW	1050	0.97	0.89
	HIGH	1350	0.99	0.94
4TXFH041AS3+TDD080R9V3	NOMINAL	1200	0.98	0.91
	LOW	1050	0.97	0.89
	HIGH	1350	0.99	0.93
4TXFH041AS3+TDD1B060A9H3	NOMINAL	1200	0.98	0.94
	LOW	1050	0.97	0.92
	HIGH	1350	0.99	0.96
4TXFH041AS3+TDD1B080A9H3	NOMINAL	1200	0.98	0.94
	LOW	1050	0.97	0.91
	HIGH	1350	0.99	0.96
4TXFH041AS3+TDX1B060A9H3	NOMINAL	1200	0.98	0.95
	LOW	1050	0.97	0.93
	HIGH	1350	0.99	0.98
4TXFH041AS3+TDX1B080A9H3	NOMINAL	1200	0.98	0.95
	LOW	1050	0.97	0.92
	HIGH	1350	0.99	0.97
4TXFH041AS3+TDX1C100A9H4	NOMINAL	1200	0.97	0.90
	LOW	1050	0.96	0.88
	HIGH	1350	0.98	0.93
4TXFH041AS3+TDY060R9V3	NOMINAL	1200	0.98	0.93
	LOW	1050	0.97	0.90
	HIGH	1350	0.99	0.95
4TXFH041AS3+TDY080R9V3	NOMINAL	1200	0.99	0.95
	LOW	1050	0.97	0.92
	HIGH	1350	1.00	0.97
4TXFH041AS3+TDY100R9V4	NOMINAL	1200	0.98	0.93
	LOW	1050	0.97	0.91
	HIGH	1350	0.99	0.95
4TXFH041AS3+TUD060R9V3	NOMINAL	1200	0.99	0.94
	LOW	1050	0.97	0.91
	HIGH	1350	1.00	0.96
4TXFH041AS3+TUD080R9V3	NOMINAL	1200	0.98	0.92
	LOW	1050	0.97	0.90
	HIGH	1350	0.99	0.95
4TXFH041AS3+TUD080R9V4	NOMINAL	1200	0.98	0.90
	LOW	1050	0.96	0.88
	HIGH	1350	0.99	0.92
4TXFH041AS3+TUD100R9V3	NOMINAL	1200	0.98	0.94
	LOW	1050	0.97	0.91
	HIGH	1350	0.99	0.96
4TXFH041AS3+TUD1B060A9H3	NOMINAL	1200	0.98	0.91
	LOW	1050	0.96	0.89
	HIGH	1350	0.99	0.94
4TXFH041AS3+TUD1B080A9H3	NOMINAL	1200	0.97	0.90
	LOW	1050	0.96	0.88
	HIGH	1350	0.98	0.92

Performance Data
Heating

4TWB3036A1

CORRECTION FACTORS FOR OTHER COMBINATIONS (MULTIPLY DATA BY FACTOR)

INDOOR MODEL		CFM	MBTUH TOT	SYST KW
4TXFH041AS3+TUD1B100A9H3	NOMINAL	1200	0.98	0.91
	LOW	1050	0.97	0.89
	HIGH	1350	0.99	0.94
4TXFH041AS3+TUD1C080A9H4	NOMINAL	1200	0.97	0.90
	LOW	1050	0.96	0.88
	HIGH	1350	0.98	0.92
4TXFH041AS3+TUX1B060A9H3	NOMINAL	1200	0.98	0.93
	LOW	1050	0.97	0.91
	HIGH	1350	0.99	0.95
4TXFH041AS3+TUX1B080A9H3	NOMINAL	1200	0.98	0.93
	LOW	1050	0.97	0.91
	HIGH	1350	0.99	0.95
4TXFH041AS3+TUX1C100A9H4	NOMINAL	1200	0.97	0.90
	LOW	1050	0.96	0.88
	HIGH	1350	0.98	0.92
4TXFH041AS3+TUY060R9V3	NOMINAL	1200	0.98	0.93
	LOW	1050	0.97	0.91
	HIGH	1350	0.99	0.96
4TXFH041AS3+TUY080R9V3	NOMINAL	1200	0.98	0.92
	LOW	1050	0.97	0.90
	HIGH	1350	0.99	0.95
4TXFH041AS3+TUY100R9V4	NOMINAL	1200	0.98	0.91
	LOW	1050	0.97	0.89
	HIGH	1350	0.99	0.94
RXC031S3	NOMINAL	1200	0.99	0.98
	LOW	1050	0.98	0.96
	HIGH	1350	1.00	1.01
RXC031S3+TDD060R9V3	NOMINAL	1200	0.99	0.96
	LOW	1050	0.97	0.94
	HIGH	1350	1.00	0.99
RXC031S3+TDD080R9V3	NOMINAL	1200	0.98	0.95
	LOW	1050	0.97	0.92
	HIGH	1350	0.99	0.97
RXC031S3+TDD1B060A9H3	NOMINAL	1200	0.98	0.93
	LOW	1050	0.96	0.90
	HIGH	1350	0.99	0.95
RXC031S3+TDD1B080A9H3	NOMINAL	1200	0.98	0.93
	LOW	1050	0.96	0.90
	HIGH	1350	0.99	0.95
RXC031S3+TDX1B040A9H2	NOMINAL	1200	0.98	0.95
	LOW	1050	0.97	0.92
	HIGH	1350	1.00	0.97
RXC031S3+TDX1B060A9H3	NOMINAL	1200	0.98	0.93
	LOW	1050	0.97	0.90
	HIGH	1350	0.99	0.95
RXC031S3+TDX1B080A9H3	NOMINAL	1200	0.98	0.96
	LOW	1050	0.97	0.94
	HIGH	1350	0.99	0.98
RXC031S3+TDY060R9V3	NOMINAL	1200	0.98	0.95
	LOW	1050	0.97	0.92
	HIGH	1350	0.99	0.97
RXC031S3+TDY080R9V3	NOMINAL	1200	0.99	0.97
	LOW	1050	0.98	0.94
	HIGH	1350	1.00	0.99
RXC031S3+TUD060R9V3	NOMINAL	1200	0.99	0.97
	LOW	1050	0.98	0.95
	HIGH	1350	1.00	1.00
RXC031S3+TUD080R9V3	NOMINAL	1200	0.98	0.97
	LOW	1050	0.97	0.94
	HIGH	1350	0.99	0.99
RXC031S3+TUD1A040A9H2	NOMINAL	1200	0.98	0.93
	LOW	1050	0.97	0.91
	HIGH	1350	0.99	0.96

CORRECTION FACTORS FOR OTHER COMBINATIONS (MULTIPLY DATA BY FACTOR)

INDOOR MODEL		CFM	MBTUH TOT	SYST KW
RXC031S3+TUD1B060A9H3	NOMINAL	1200	0.98	0.92
	LOW	1050	0.97	0.90
	HIGH	1350	0.99	0.94
RXC031S3+TUD1B080A9H3	NOMINAL	1200	0.97	0.91
	LOW	1050	0.96	0.89
	HIGH	1350	0.99	0.93
RXC031S3+TUX1B040A9H2	NOMINAL	1200	0.98	0.94
	LOW	1050	0.97	0.91
	HIGH	1350	0.99	0.96
RXC031S3+TUX1B060A9H3	NOMINAL	1200	0.98	0.94
	LOW	1050	0.97	0.92
	HIGH	1350	0.99	0.96
RXC031S3+TUX1B080A9H3	NOMINAL	1200	0.98	0.92
	LOW	1050	0.96	0.90
	HIGH	1350	0.99	0.95
RXC031S3+TUY060R9V3	NOMINAL	1200	0.98	0.95
	LOW	1050	0.97	0.93
	HIGH	1350	1.00	0.98
RXC031S3+TUY080R9V3	NOMINAL	1200	0.98	0.93
	LOW	1050	0.97	0.91
	HIGH	1350	0.99	0.96
TWE036C14+4AYTXVH-3	NOMINAL	1200	0.98	0.98
	LOW	1050	0.97	0.96
	HIGH	1350	0.99	1.01
TWE048C14+4AYTXVH-3	NOMINAL	1200	1.01	1.01
	LOW	1050	1.00	0.99
	HIGH	1350	1.02	1.04
TXA036C4+4AYTXVH-3	NOMINAL	1200	0.99	0.99
	LOW	1050	0.98	0.96
	HIGH	1350	1.00	1.01
TXC036C4+4AYTXVH-3	NOMINAL	1200	0.99	0.99
	LOW	1050	0.98	0.96
	HIGH	1350	1.00	1.01
TXH033A4+4AYTXVH-3+TDD060R9V3	NOMINAL	1200	0.96	0.94
	LOW	1050	0.95	0.92
	HIGH	1350	0.97	0.97
TXH033A4+4AYTXVH-3+TDD080R9V3	NOMINAL	1200	0.96	0.93
	LOW	1050	0.95	0.91
	HIGH	1350	0.97	0.96
TXH033A4+4AYTXVH-3+TDD100R9V5	NOMINAL	1200	0.96	0.90
	LOW	1050	0.94	0.87
	HIGH	1350	0.97	0.92
TXH033A4+4AYTXVH-3+TDD1B060A9H3	NOMINAL	1200	0.96	0.92
	LOW	1050	0.94	0.89
	HIGH	1350	0.97	0.94
TXH033A4+4AYTXVH-3+TDD1B080A9H3	NOMINAL	1200	0.96	0.92
	LOW	1050	0.95	0.89
	HIGH	1350	0.97	0.94
TXH033A4+4AYTXVH-3+TDX1B040A9H2	NOMINAL	1200	0.97	0.94
	LOW	1050	0.95	0.91
	HIGH	1350	0.98	0.96
TXH033A4+4AYTXVH-3+TDX1B060A9H3	NOMINAL	1200	0.96	0.92
	LOW	1050	0.95	0.90
	HIGH	1350	0.97	0.94
TXH033A4+4AYTXVH-3+TDX1B080A9H3	NOMINAL	1200	0.96	0.91
	LOW	1050	0.95	0.88
	HIGH	1350	0.97	0.93
TXH033A4+4AYTXVH-3+TDX1C100A9H4	NOMINAL	1200	0.96	0.90
	LOW	1050	0.94	0.88
	HIGH	1350	0.97	0.93
TXH033A4+4AYTXVH-3+TDY060R9V3	NOMINAL	1200	0.96	0.93
	LOW	1050	0.95	0.90
	HIGH	1350	0.97	0.95

Performance Data
Heating

4TWB3036A1

CORRECTION FACTORS FOR OTHER COMBINATIONS (MULTIPLY DATA BY FACTOR)

INDOOR MODEL		CFM	MBTUH TOT	SYST KW
TXH033A4+4AYTXVH-3+TDY080R9V3	NOMINAL	1200	0.97	0.95
	LOW	1050	0.96	0.92
	HIGH	1350	0.98	0.97
TXH033A4+4AYTXVH-3+TDY100R9V4	NOMINAL	1200	0.96	0.92
	LOW	1050	0.95	0.90
	HIGH	1350	0.97	0.94
TXH033A4+4AYTXVH-3+TUD060R9V3	NOMINAL	1200	0.96	0.95
	LOW	1050	0.95	0.93
	HIGH	1350	0.97	0.98
TXH033A4+4AYTXVH-3+TUD080R9V3	NOMINAL	1200	0.97	0.95
	LOW	1050	0.95	0.92
	HIGH	1350	0.98	0.97
TXH033A4+4AYTXVH-3+TUD100R9V5	NOMINAL	1200	0.95	0.90
	LOW	1050	0.94	0.87
	HIGH	1350	0.97	0.92
TXH033A4+4AYTXVH-3+TUD1A040A9H2	NOMINAL	1200	0.96	0.92
	LOW	1050	0.95	0.90
	HIGH	1350	0.97	0.95
TXH033A4+4AYTXVH-3+TUD1B060A9H3	NOMINAL	1200	0.95	0.91
	LOW	1050	0.94	0.88
	HIGH	1350	0.96	0.93
TXH033A4+4AYTXVH-3+TUD1B080A9H3	NOMINAL	1200	0.96	0.90
	LOW	1050	0.94	0.88
	HIGH	1350	0.97	0.92
TXH033A4+4AYTXVH-3+TUX1B040A9H2	NOMINAL	1200	0.96	0.93
	LOW	1050	0.95	0.90
	HIGH	1350	0.97	0.95
TXH033A4+4AYTXVH-3+TUX1B060A9H3	NOMINAL	1200	0.96	0.93
	LOW	1050	0.95	0.90
	HIGH	1350	0.97	0.95
TXH033A4+4AYTXVH-3+TUX1B080A9H3	NOMINAL	1200	0.96	0.91
	LOW	1050	0.94	0.89
	HIGH	1350	0.97	0.94
TXH033A4+4AYTXVH-3+TUX1C100A9H4	NOMINAL	1200	0.95	0.90
	LOW	1050	0.94	0.88
	HIGH	1350	0.96	0.92
TXH033A4+4AYTXVH-3+TUY060R9V3	NOMINAL	1200	0.96	0.93
	LOW	1050	0.95	0.91
	HIGH	1350	0.97	0.95
TXH033A4+4AYTXVH-3+TUY080R9V3	NOMINAL	1200	0.96	0.92
	LOW	1050	0.95	0.90
	HIGH	1350	0.97	0.94
TXH033A4+4AYTXVH-3+TUY100R9V4	NOMINAL	1200	0.96	0.91
	LOW	1050	0.95	0.89
	HIGH	1350	0.97	0.94
TXH041A4+4AYTXVH-3	NOMINAL	1200	0.99	0.99
	LOW	1050	0.98	0.96
	HIGH	1350	1.01	1.01
TXH041A4+4AYTXVH-3+TDD060R9V3	NOMINAL	1200	0.98	0.94
	LOW	1050	0.97	0.92
	HIGH	1350	0.99	0.96
TXH041A4+4AYTXVH-3+TDD080R9V3	NOMINAL	1200	0.98	0.93
	LOW	1050	0.97	0.91
	HIGH	1350	0.99	0.95
TXH041A4+4AYTXVH-3+TDD100R9V5	NOMINAL	1200	0.97	0.90
	LOW	1050	0.96	0.88
	HIGH	1350	0.98	0.92
TXH041A4+4AYTXVH-3+TDD1B060A9H3	NOMINAL	1200	0.98	0.94
	LOW	1050	0.97	0.92
	HIGH	1350	0.99	0.96
TXH041A4+4AYTXVH-3+TDD1B080A9H3	NOMINAL	1200	0.98	0.94
	LOW	1050	0.97	0.91
	HIGH	1350	0.99	0.96

CORRECTION FACTORS FOR OTHER COMBINATIONS (MULTIPLY DATA BY FACTOR)

INDOOR MODEL		CFM	MBTUH TOT	SYST KW
TXH041A4+4AYTXVH-3+TDX1B040A9H2	NOMINAL	1200	0.99	0.94
	LOW	1050	0.97	0.92
	HIGH	1350	1.00	0.97
TXH041A4+4AYTXVH-3+TDX1B060A9H3	NOMINAL	1200	0.98	0.95
	LOW	1050	0.97	0.93
	HIGH	1350	0.99	0.98
TXH041A4+4AYTXVH-3+TDX1B080A9H3	NOMINAL	1200	0.98	0.95
	LOW	1050	0.97	0.92
	HIGH	1350	0.99	0.97
TXH041A4+4AYTXVH-3+TDX1C100A9H4	NOMINAL	1200	0.97	0.90
	LOW	1050	0.96	0.88
	HIGH	1350	0.98	0.93
TXH041A4+4AYTXVH-3+TDY060R9V3	NOMINAL	1200	0.98	0.93
	LOW	1050	0.97	0.90
	HIGH	1350	0.99	0.95
TXH041A4+4AYTXVH-3+TDY080R9V3	NOMINAL	1200	0.99	0.95
	LOW	1050	0.97	0.92
	HIGH	1350	1.00	0.97
TXH041A4+4AYTXVH-3+TDY100R9V4	NOMINAL	1200	0.98	0.93
	LOW	1050	0.97	0.91
	HIGH	1350	0.99	0.95
TXH041A4+4AYTXVH-3+TUD060R9V3	NOMINAL	1200	0.99	0.96
	LOW	1050	0.97	0.93
	HIGH	1350	1.00	0.98
TXH041A4+4AYTXVH-3+TUD080R9V3	NOMINAL	1200	0.98	0.95
	LOW	1050	0.97	0.92
	HIGH	1350	0.99	0.97
TXH041A4+4AYTXVH-3+TUD100R9V5	NOMINAL	1200	0.98	0.90
	LOW	1050	0.97	0.88
	HIGH	1350	0.99	0.93
TXH041A4+4AYTXVH-3+TUD1A040A9H2	NOMINAL	1200	0.98	0.93
	LOW	1050	0.97	0.91
	HIGH	1350	1.00	0.95
TXH041A4+4AYTXVH-3+TUD1B060A9H3	NOMINAL	1200	0.98	0.91
	LOW	1050	0.96	0.89
	HIGH	1350	0.99	0.94
TXH041A4+4AYTXVH-3+TUD1B080A9H3	NOMINAL	1200	0.97	0.90
	LOW	1050	0.96	0.88
	HIGH	1350	0.98	0.92
TXH041A4+4AYTXVH-3+TUX1B040A9H2	NOMINAL	1200	0.98	0.93
	LOW	1050	0.97	0.91
	HIGH	1350	0.99	0.95
TXH041A4+4AYTXVH-3+TUX1B060A9H3	NOMINAL	1200	0.98	0.93
	LOW	1050	0.97	0.91
	HIGH	1350	0.99	0.95
TXH041A4+4AYTXVH-3+TUX1B080A9H3	NOMINAL	1200	0.98	0.93
	LOW	1050	0.97	0.91
	HIGH	1350	0.99	0.95
TXH041A4+4AYTXVH-3+TUX1C100A9H4	NOMINAL	1200	0.97	0.90
	LOW	1050	0.96	0.88
	HIGH	1350	0.98	0.92
TXH041A4+4AYTXVH-3+TUY060R9V3	NOMINAL	1200	0.98	0.93
	LOW	1050	0.97	0.91
	HIGH	1350	0.99	0.96
TXH041A4+4AYTXVH-3+TUY080R9V3	NOMINAL	1200	0.98	0.92
	LOW	1050	0.97	0.90
	HIGH	1350	0.99	0.95
TXH041A4+4AYTXVH-3+TUY100R9V4	NOMINAL	1200	0.98	0.91
	LOW	1050	0.97	0.89
	HIGH	1350	0.99	0.94

Performance Data
Heating

4TWB3042A1

4TWB3042A1 WITH 4TEC3F42A1 AT 1400 CFM

O.D. TEMP. F.	HEATING CAPACITY MBH AT INDOOR DRY BULB TEMP. 70	75	80	TOTAL POWER IN KILOWATTS AT INDOOR DRY BULB TEMP. 70	75	80
2	19.95	19.75	19.57	3.21	3.31	3.41
7	22.23	22.01	21.81	3.23	3.33	3.43
12	24.52	24.27	24.05	3.25	3.35	3.45
17	26.80	26.53	26.29	3.27	3.37	3.47
22	28.19	27.91	27.65	3.30	3.40	3.50
27	29.58	29.28	29.02	3.34	3.44	3.54
32	30.97	30.66	30.38	3.37	3.47	3.57
37	33.25	32.92	32.62	3.39	3.49	3.59
42	36.88	36.51	36.17	3.39	3.49	3.59
47	40.50	40.10	39.73	3.39	3.49	3.59
52	42.78	42.36	41.97	3.41	3.51	3.61
57	45.07	44.62	44.21	3.43	3.53	3.63
62	47.35	46.88	46.45	3.45	3.55	3.66
67	49.63	49.14	48.69	3.47	3.57	3.68
72	51.92	51.40	50.93	3.49	3.59	3.70

CORRECTION FACTORS FOR OTHER AIRFLOWS (MULTIPLY DATA BY FACTOR)

	AIRFLOW	TOTAL CAPACITY	SENSIBLE CAPACITY
LOW	1225	0.99	0.98
HIGH	1575	1.01	1.03

NOTE: ALL TABLES ABOVE ARE AT ARI RATING CONDITIONS RATED WITH 25 FEET OF REFRIGERANT LINES.

CORRECTION FACTORS FOR OTHER COMBINATIONS (MULTIPLY DATA BY FACTOR)

INDOOR MODEL		CFM	MBTUH TOT	SYST KW
2TEH3F42A1+4AYTXVH-3	NOMINAL	1400	1.01	0.98
	LOW	1225	1.00	0.95
	HIGH	1575	1.02	1.00
2TGB3F42A1+4AYTXVH-3	NOMINAL	1400	1.00	1.04
	LOW	1225	0.99	1.01
	HIGH	1575	1.01	1.06
4TEE3F37A1	NOMINAL	1400	0.99	1.02
	LOW	1225	0.98	0.99
	HIGH	1575	1.00	1.05
4TEE3F40A1	NOMINAL	1400	1.01	0.97
	LOW	1225	0.99	0.94
	HIGH	1575	1.02	0.99
4TEP3F42A1	NOMINAL	1400	0.96	1.01
	LOW	1225	0.95	0.98
	HIGH	1575	0.97	1.03
4TXCB036AS3	NOMINAL	1400	0.97	1.02
	LOW	1225	0.95	0.99
	HIGH	1575	0.98	1.04
4TXCB036AS3+TDD080R9V3	NOMINAL	1400	0.96	1.00
	LOW	1225	0.95	0.98
	HIGH	1575	0.97	1.03
4TXCB036AS3+TDD1B080A9H3	NOMINAL	1400	0.95	0.98
	LOW	1225	0.94	0.96
	HIGH	1575	0.96	1.01
4TXCB036AS3+TUD080R9V3	NOMINAL	1400	0.96	1.02
	LOW	1225	0.95	1.00
	HIGH	1575	0.97	1.05
4TXCB036AS3+TUD1B080A9H3	NOMINAL	1400	0.95	0.96
	LOW	1225	0.94	0.94
	HIGH	1575	0.96	0.99
4TXCB036AS3+TUX1B080A9H3	NOMINAL	1400	0.96	0.98
	LOW	1225	0.95	0.95
	HIGH	1575	0.97	1.00
4TXCB036AS3+TUY080R9V3	NOMINAL	1400	0.96	0.99
	LOW	1225	0.95	0.97
	HIGH	1575	0.97	1.02

CORRECTION FACTORS FOR OTHER COMBINATIONS (MULTIPLY DATA BY FACTOR)

INDOOR MODEL		CFM	MBTUH TOT	SYST KW
4TXCB042AC3+TDD100R9V5	NOMINAL	1400	0.94	0.95
	LOW	1225	0.93	0.93
	HIGH	1575	0.95	0.98
4TXCB042AC3+TDD120R9V5	NOMINAL	1400	0.93	0.93
	LOW	1225	0.91	0.90
	HIGH	1575	0.94	0.95
4TXCB042AC3+TDY100R9V4	NOMINAL	1400	0.95	0.99
	LOW	1225	0.93	0.96
	HIGH	1575	0.96	1.01
4TXCB042AC3+TDY120R9V5	NOMINAL	1400	0.94	0.97
	LOW	1225	0.93	0.94
	HIGH	1575	0.95	0.99
4TXCB042AC3+TUD080R9V4	NOMINAL	1400	0.94	0.95
	LOW	1225	0.93	0.93
	HIGH	1575	0.95	0.98
4TXCB042AC3+TUD120R9V5	NOMINAL	1400	0.93	0.94
	LOW	1225	0.92	0.92
	HIGH	1575	0.94	0.97
4TXCB042AC3+TUD1C080A9H4	NOMINAL	1400	0.93	0.94
	LOW	1225	0.92	0.92
	HIGH	1575	0.94	0.97
4TXCB042AC3+TUX1C100A9H4	NOMINAL	1400	0.93	0.95
	LOW	1225	0.92	0.93
	HIGH	1575	0.94	0.98
4TXCB042AC3+TUY100R9V4	NOMINAL	1400	0.94	0.97
	LOW	1225	0.92	0.94
	HIGH	1575	0.95	0.99
4TXCB042AC3+TUY120R9V5	NOMINAL	1400	0.94	0.96
	LOW	1225	0.93	0.94
	HIGH	1575	0.95	0.98
4TXCC037AS3	NOMINAL	1400	0.98	1.03
	LOW	1225	0.96	1.00
	HIGH	1575	0.99	1.05
4TXCC037AS3+TDD100R9V5	NOMINAL	1400	0.96	0.98
	LOW	1225	0.95	0.96
	HIGH	1575	0.97	1.01
4TXCC037AS3+TDD1C100A9H5	NOMINAL	1400	0.95	0.95
	LOW	1225	0.94	0.93
	HIGH	1575	0.96	0.98
4TXCC037AS3+TDX1C100A9H4	NOMINAL	1400	0.95	0.93
	LOW	1225	0.94	0.91
	HIGH	1575	0.96	0.95
4TXCC037AS3+TDY100R9V4	NOMINAL	1400	0.96	0.98
	LOW	1225	0.95	0.95
	HIGH	1575	0.97	1.00
4TXCC037AS3+TUD100R9V5	NOMINAL	1400	0.95	0.98
	LOW	1225	0.94	0.96
	HIGH	1575	0.97	1.00
4TXCC037AS3+TUX1C100A9H4	NOMINAL	1400	0.95	0.96
	LOW	1225	0.94	0.93
	HIGH	1575	0.96	0.98
4TXCC037AS3+TUY100R9V4	NOMINAL	1400	0.96	0.97
	LOW	1225	0.95	0.94
	HIGH	1575	0.97	0.99
4TXCC043AC3+TDD100R9V5	NOMINAL	1400	0.93	0.93
	LOW	1225	0.91	0.90
	HIGH	1575	0.94	0.95
4TXCC043AC3+TDD120R9V5	NOMINAL	1400	0.93	0.92
	LOW	1225	0.91	0.90
	HIGH	1575	0.94	0.94
4TXCC043AC3+TDD1C100A9H5	NOMINAL	1400	0.92	0.94
	LOW	1225	0.91	0.92
	HIGH	1575	0.93	0.96

Performance Data
Heating

4TWB3042A1

CORRECTION FACTORS FOR OTHER COMBINATIONS (MULTIPLY DATA BY FACTOR)

INDOOR MODEL		CFM	MBTUH TOT	SYST KW
4TXCC043AC3+TDD1D120A9H5	NOMINAL	1400	0.92	0.94
	LOW	1225	0.91	0.92
	HIGH	1575	0.93	0.96
4TXCC043AC3+TDX1D120A9H5	NOMINAL	1400	0.94	0.97
	LOW	1225	0.93	0.94
	HIGH	1575	0.95	0.99
4TXCC043AC3+TDY100R9V4	NOMINAL	1400	0.94	0.97
	LOW	1225	0.92	0.95
	HIGH	1575	0.95	0.99
4TXCC043AC3+TDY120R9V5	NOMINAL	1400	0.94	0.96
	LOW	1225	0.93	0.94
	HIGH	1575	0.95	0.99
4TXCC043AC3+TUD080R9V4	NOMINAL	1400	0.92	0.93
	LOW	1225	0.91	0.91
	HIGH	1575	0.93	0.95
4TXCC043AC3+TUD100R9V5	NOMINAL	1400	0.92	0.93
	LOW	1225	0.91	0.91
	HIGH	1575	0.93	0.95
4TXCC043AC3+TUD120R9V5	NOMINAL	1400	0.93	0.94
	LOW	1225	0.92	0.91
	HIGH	1575	0.95	0.96
4TXCC043AC3+TUD140R9V5	NOMINAL	1400	0.93	0.92
	LOW	1225	0.92	0.90
	HIGH	1575	0.94	0.95
4TXCC043AC3+TUD1C080A9H4	NOMINAL	1400	0.93	0.94
	LOW	1225	0.91	0.91
	HIGH	1575	0.94	0.96
4TXCC043AC3+TUD1C100A9H5	NOMINAL	1400	0.94	0.97
	LOW	1225	0.93	0.95
	HIGH	1575	0.95	1.00
4TXCC043AC3+TUD1D120A9H5	NOMINAL	1400	0.93	0.95
	LOW	1225	0.92	0.93
	HIGH	1575	0.94	0.97
4TXCC043AC3+TUD1D140A9H5	NOMINAL	1400	0.93	0.95
	LOW	1225	0.92	0.93
	HIGH	1575	0.94	0.98
4TXCC043AC3+TUX1C100A9H4	NOMINAL	1400	0.92	0.95
	LOW	1225	0.91	0.92
	HIGH	1575	0.93	0.97
4TXCC043AC3+TUX1D120A9H5	NOMINAL	1400	0.93	0.96
	LOW	1225	0.92	0.93
	HIGH	1575	0.94	0.98
4TXCC043AC3+TUY100R9V4	NOMINAL	1400	0.94	0.96
	LOW	1225	0.92	0.93
	HIGH	1575	0.95	0.98
4TXCC043AC3+TUY120R9V5	NOMINAL	1400	0.94	0.95
	LOW	1225	0.93	0.93
	HIGH	1575	0.95	0.98
4TXFH041AS3	NOMINAL	1400	0.97	1.01
	LOW	1225	0.96	0.99
	HIGH	1575	0.98	1.04
4TXFH041AS3+TDD100R9V5	NOMINAL	1400	0.95	0.94
	LOW	1225	0.94	0.91
	HIGH	1575	0.96	0.96
4TXFH041AS3+TDD120R9V5	NOMINAL	1400	0.95	0.93
	LOW	1225	0.94	0.90
	HIGH	1575	0.96	0.95
4TXFH041AS3+TDD1C100A9H5	NOMINAL	1400	0.95	0.95
	LOW	1225	0.93	0.92
	HIGH	1575	0.96	0.97
4TXFH041AS3+TDD1D120A9H5	NOMINAL	1400	0.95	0.95
	LOW	1225	0.93	0.92
	HIGH	1575	0.96	0.97

CORRECTION FACTORS FOR OTHER COMBINATIONS (MULTIPLY DATA BY FACTOR)

INDOOR MODEL		CFM	MBTUH TOT	SYST KW
4TXFH041AS3+TDX1C100A9H4	NOMINAL	1400	0.95	0.93
	LOW	1225	0.94	0.90
	HIGH	1575	0.96	0.95
4TXFH041AS3+TDX1D120A9H5	NOMINAL	1400	0.96	0.97
	LOW	1225	0.95	0.95
	HIGH	1575	0.97	1.00
4TXFH041AS3+TDY100R9V4	NOMINAL	1400	0.96	0.97
	LOW	1225	0.95	0.95
	HIGH	1575	0.97	1.00
4TXFH041AS3+TDY120R9V5	NOMINAL	1400	0.96	0.97
	LOW	1225	0.95	0.94
	HIGH	1575	0.98	0.99
4TXFH041AS3+TUD080R9V4	NOMINAL	1400	0.95	0.94
	LOW	1225	0.94	0.92
	HIGH	1575	0.96	0.96
4TXFH041AS3+TUD100R9V5	NOMINAL	1400	0.95	0.94
	LOW	1225	0.94	0.91
	HIGH	1575	0.96	0.96
4TXFH041AS3+TUD120R9V5	NOMINAL	1400	0.95	0.93
	LOW	1225	0.93	0.90
	HIGH	1575	0.96	0.95
4TXFH041AS3+TUD140R9V5	NOMINAL	1400	0.95	0.93
	LOW	1225	0.94	0.91
	HIGH	1575	0.96	0.95
4TXFH041AS3+TUD1C080A9H4	NOMINAL	1400	0.95	0.94
	LOW	1225	0.94	0.92
	HIGH	1575	0.96	0.97
4TXFH041AS3+TUD1C100A9H5	NOMINAL	1400	0.95	0.97
	LOW	1225	0.94	0.94
	HIGH	1575	0.96	0.99
4TXFH041AS3+TUD1D120A9H5	NOMINAL	1400	0.94	0.94
	LOW	1225	0.93	0.92
	HIGH	1575	0.95	0.96
4TXFH041AS3+TUD1D140A9H5	NOMINAL	1400	0.96	0.96
	LOW	1225	0.94	0.93
	HIGH	1575	0.97	0.98
4TXFH041AS3+TUX1C100A9H4	NOMINAL	1400	0.95	0.95
	LOW	1225	0.93	0.93
	HIGH	1575	0.96	0.98
4TXFH041AS3+TUX1D120A9H5	NOMINAL	1400	0.95	0.96
	LOW	1225	0.94	0.94
	HIGH	1575	0.96	0.99
4TXFH041AS3+TUY100R9V4	NOMINAL	1400	0.96	0.96
	LOW	1225	0.95	0.94
	HIGH	1575	0.97	0.99
4TXFH041AS3+TUY120R9V5	NOMINAL	1400	0.95	0.94
	LOW	1225	0.94	0.92
	HIGH	1575	0.96	0.97
RXC036S3	NOMINAL	1400	0.98	1.01
	LOW	1225	0.97	0.99
	HIGH	1575	0.99	1.04
RXC036S3+TDD080R9V3	NOMINAL	1400	0.97	1.00
	LOW	1225	0.96	0.97
	HIGH	1575	0.98	1.02
RXC036S3+TDD1B080A9H3	NOMINAL	1400	0.98	0.99
	LOW	1225	0.96	0.97
	HIGH	1575	0.99	1.02
RXC036S3+TUD080R9V3	NOMINAL	1400	0.97	1.02
	LOW	1225	0.96	1.00
	HIGH	1575	0.98	1.05
RXC036S3+TUD1B080A9H3	NOMINAL	1400	0.96	0.96
	LOW	1225	0.95	0.94
	HIGH	1575	0.97	0.99

Performance Data
Heating

4TWB3042A1

CORRECTION FACTORS FOR OTHER COMBINATIONS (MULTIPLY DATA BY FACTOR)

INDOOR MODEL		CFM	MBTUH TOT	SYST KW
RXC036S3+TUX1B080A9H3	NOMINAL	1400	0.97	0.97
	LOW	1225	0.96	0.95
	HIGH	1575	0.98	1.00
RXC036S3+TUY080R9V3	NOMINAL	1400	0.98	0.99
	LOW	1225	0.96	0.96
	HIGH	1575	0.99	1.01
RXC037S3	NOMINAL	1400	0.99	1.02
	LOW	1225	0.97	1.00
	HIGH	1575	1.00	1.05
RXC037S3+TDD100R9V5	NOMINAL	1400	0.97	0.98
	LOW	1225	0.96	0.95
	HIGH	1575	0.98	1.00
RXC037S3+TDD1C100A9H5	NOMINAL	1400	0.96	0.95
	LOW	1225	0.95	0.93
	HIGH	1575	0.97	0.97
RXC037S3+TDX1C100A9H4	NOMINAL	1400	0.96	0.93
	LOW	1225	0.95	0.91
	HIGH	1575	0.97	0.95
RXC037S3+TDY100R9V4	NOMINAL	1400	0.97	0.98
	LOW	1225	0.96	0.95
	HIGH	1575	0.98	1.00
RXC037S3+TUD100R9V5	NOMINAL	1400	0.98	0.99
	LOW	1225	0.97	0.97
	HIGH	1575	0.99	1.02
RXC037S3+TUX1C100A9H4	NOMINAL	1400	0.97	0.97
	LOW	1225	0.96	0.94
	HIGH	1575	0.98	0.99
RXC037S3+TUY100R9V4	NOMINAL	1400	0.98	0.97
	LOW	1225	0.96	0.94
	HIGH	1575	0.99	0.99
TWE048C14+4AYTXVH-3	NOMINAL	1400	0.98	1.02
	LOW	1225	0.96	1.00
	HIGH	1575	0.99	1.05
TXA048C4+4AYTXVH-3	NOMINAL	1400	0.97	1.01
	LOW	1225	0.96	0.99
	HIGH	1575	0.98	1.04
TXA050C4+4AYTXVH-3	NOMINAL	1400	0.96	1.01
	LOW	1225	0.95	0.99
	HIGH	1575	0.97	1.04
TXC048C4+4AYTXVH-3	NOMINAL	1400	0.97	1.01
	LOW	1225	0.96	0.99
	HIGH	1575	0.98	1.04
TXC050C4+4AYTXVH-3	NOMINAL	1400	0.96	1.01
	LOW	1225	0.95	0.99
	HIGH	1575	0.97	1.04
TXH041A4+4AYTXVH-3	NOMINAL	1400	0.96	1.01
	LOW	1225	0.95	0.98
	HIGH	1575	0.97	1.03
TXH041A4+4AYTXVH-3+TDD080R9V3	NOMINAL	1400	0.96	0.98
	LOW	1225	0.95	0.96
	HIGH	1575	0.97	1.01
TXH041A4+4AYTXVH-3+TDD100R9V5	NOMINAL	1400	0.95	0.96
	LOW	1225	0.94	0.94
	HIGH	1575	0.96	0.98
TXH041A4+4AYTXVH-3+TDD120R9V5	NOMINAL	1400	0.95	0.95
	LOW	1225	0.94	0.93
	HIGH	1575	0.96	0.98
TXH041A4+4AYTXVH-3+TDD1B080A9H3	NOMINAL	1400	0.96	0.98
	LOW	1225	0.95	0.95
	HIGH	1575	0.97	1.00

CORRECTION FACTORS FOR OTHER COMBINATIONS (MULTIPLY DATA BY FACTOR)

INDOOR MODEL		CFM	MBTUH TOT	SYST KW
TXH041A4+4AYTXVH-3+TDD1C100A9H5	NOMINAL	1400	0.95	0.95
	LOW	1225	0.93	0.92
	HIGH	1575	0.96	0.97
TXH041A4+4AYTXVH-3+TDD1D120A9H5	NOMINAL	1400	0.95	0.95
	LOW	1225	0.93	0.92
	HIGH	1575	0.96	0.97
TXH041A4+4AYTXVH-3+TDX1C100A9H4	NOMINAL	1400	0.95	0.93
	LOW	1225	0.94	0.90
	HIGH	1575	0.96	0.95
TXH041A4+4AYTXVH-3+TDX1D120A9H5	NOMINAL	1400	0.96	0.97
	LOW	1225	0.95	0.95
	HIGH	1575	0.97	1.00
TXH041A4+4AYTXVH-3+TDY100R9V4	NOMINAL	1400	0.96	0.97
	LOW	1225	0.95	0.95
	HIGH	1575	0.97	1.00
TXH041A4+4AYTXVH-3+TDY120R9V5	NOMINAL	1400	0.96	0.97
	LOW	1225	0.95	0.94
	HIGH	1575	0.98	0.99
TXH041A4+4AYTXVH-3+TUD080R9V3	NOMINAL	1400	0.97	1.02
	LOW	1225	0.96	0.99
	HIGH	1575	0.98	1.04
TXH041A4+4AYTXVH-3+TUD100R9V5	NOMINAL	1400	0.96	0.97
	LOW	1225	0.94	0.95
	HIGH	1575	0.97	1.00
TXH041A4+4AYTXVH-3+TUD120R9V5	NOMINAL	1400	0.95	0.95
	LOW	1225	0.94	0.93
	HIGH	1575	0.96	0.98
TXH041A4+4AYTXVH-3+TUD140R9V5	NOMINAL	1400	0.95	0.95
	LOW	1225	0.94	0.93
	HIGH	1575	0.96	0.98
TXH041A4+4AYTXVH-3+TUD1B080A9H3	NOMINAL	1400	0.96	0.96
	LOW	1225	0.94	0.93
	HIGH	1575	0.97	0.98
TXH041A4+4AYTXVH-3+TUD1C100A9H5	NOMINAL	1400	0.95	0.97
	LOW	1225	0.94	0.94
	HIGH	1575	0.96	0.99
TXH041A4+4AYTXVH-3+TUD1D120A9H5	NOMINAL	1400	0.94	0.94
	LOW	1225	0.93	0.92
	HIGH	1575	0.95	0.96
TXH041A4+4AYTXVH-3+TUD1D140A9H5	NOMINAL	1400	0.96	0.96
	LOW	1225	0.94	0.93
	HIGH	1575	0.97	0.98
TXH041A4+4AYTXVH-3+TUX1B080A9H3	NOMINAL	1400	0.96	0.98
	LOW	1225	0.94	0.95
	HIGH	1575	0.97	1.00
TXH041A4+4AYTXVH-3+TUX1C100A9H4	NOMINAL	1400	0.95	0.95
	LOW	1225	0.93	0.93
	HIGH	1575	0.96	0.98
TXH041A4+4AYTXVH-3+TUX1D120A9H5	NOMINAL	1400	0.95	0.96
	LOW	1225	0.94	0.94
	HIGH	1575	0.96	0.99
TXH041A4+4AYTXVH-3+TUY080R9V3	NOMINAL	1400	0.96	0.97
	LOW	1225	0.95	0.95
	HIGH	1575	0.98	1.00
TXH041A4+4AYTXVH-3+TUY100R9V4	NOMINAL	1400	0.96	0.96
	LOW	1225	0.95	0.94
	HIGH	1575	0.97	0.99
TXH041A4+4AYTXVH-3+TUY120R9V5	NOMINAL	1400	0.95	0.94
	LOW	1225	0.94	0.92
	HIGH	1575	0.96	0.97

Performance Data
Heating

4TWB3048A1

4TWB3048A1 WITH 4TEC3F48A1 AT 1600 CFM

O.D. TEMP. F.	HEATING CAPACITY MBH AT INDOOR DRY BULB TEMP. 70	75	80	TOTAL POWER IN KILOWATTS AT INDOOR DRY BULB TEMP. 70	75	80
2	20.98	20.77	20.58	3.30	3.39	3.49
7	23.82	23.58	23.36	3.38	3.48	3.58
12	26.65	26.39	26.15	3.46	3.56	3.67
17	29.49	29.19	28.93	3.54	3.65	3.75
22	30.55	30.24	29.97	3.57	3.67	3.78
27	31.61	31.29	31.01	3.59	3.70	3.80
32	32.67	32.35	32.05	3.61	3.72	3.83
37	35.51	35.15	34.83	3.70	3.81	3.92
42	41.00	40.59	40.22	3.86	3.98	4.09
47	46.50	46.04	45.62	4.03	4.15	4.27
52	49.34	48.84	48.40	4.11	4.24	4.36
57	52.17	51.65	51.18	4.19	4.32	4.45
62	55.01	54.46	53.96	4.28	4.40	4.53
67	57.84	57.26	56.74	4.36	4.49	4.62
72	60.68	60.07	59.52	4.44	4.57	4.71

CORRECTION FACTORS FOR OTHER AIRFLOWS (MULTIPLY DATA BY FACTOR)

	AIRFLOW	TOTAL CAPACITY	SENSIBLE CAPACITY
LOW	1400	0.99	0.98
HIGH	1800	1.01	1.03

NOTE: ALL TABLES ABOVE ARE AT ARI RATING CONDITIONS RATED WITH 25 FEET OF REFRIGERANT LINES.

CORRECTION FACTORS FOR OTHER COMBINATIONS (MULTIPLY DATA BY FACTOR)

INDOOR MODEL		CFM	MBTUH TOT	SYST KW
2TEH3F48A1+4AYTXVH-3	NOMINAL	1600	0.98	0.95
	LOW	1400	0.97	0.93
	HIGH	1800	1.00	0.98
2TEH3F60A1+4AYTXVH-3	NOMINAL	1600	0.98	0.96
	LOW	1400	0.97	0.93
	HIGH	1800	0.99	0.98
2TGB3F48A1+4AYTXVH-3	NOMINAL	1600	0.98	0.99
	LOW	1400	0.97	0.96
	HIGH	1800	0.99	1.01
4TEE3F40A1	NOMINAL	1600	1.01	0.97
	LOW	1400	1.00	0.95
	HIGH	1800	1.02	0.99
4TEP3F48B1	NOMINAL	1600	0.97	0.97
	LOW	1400	0.96	0.95
	HIGH	1800	0.98	0.99
4TXCB048AC3+TDD120R9V5	NOMINAL	1600	0.96	0.97
	LOW	1400	0.95	0.95
	HIGH	1800	0.97	0.99
4TXCB048AC3+TDD1C100A9H5	NOMINAL	1600	0.96	0.95
	LOW	1400	0.94	0.93
	HIGH	1800	0.97	0.97
4TXCB048AC3+TDD1D120A9H5	NOMINAL	1600	0.95	0.95
	LOW	1400	0.94	0.92
	HIGH	1800	0.96	0.97
4TXCB048AC3+TDX1C100A9H4	NOMINAL	1600	0.97	0.97
	LOW	1400	0.95	0.95
	HIGH	1800	0.98	1.00
4TXCB048AC3+TUD120R9V5	NOMINAL	1600	0.97	0.97
	LOW	1400	0.95	0.95
	HIGH	1800	0.98	1.00
4TXCB048AC3+TUD1C080A9H4	NOMINAL	1600	0.95	0.94
	LOW	1400	0.94	0.92
	HIGH	1800	0.96	0.97
4TXCB048AC3+TUD1D120A9H5	NOMINAL	1600	0.95	0.94
	LOW	1400	0.94	0.92
	HIGH	1800	0.96	0.96

CORRECTION FACTORS FOR OTHER COMBINATIONS (MULTIPLY DATA BY FACTOR)

INDOOR MODEL		CFM	MBTUH TOT	SYST KW
4TXCB048AC3+TUD1D140A9H5	NOMINAL	1600	0.95	0.94
	LOW	1400	0.94	0.92
	HIGH	1800	0.96	0.97
4TXCB048AC3+TUX1D120A9H5	NOMINAL	1600	0.96	0.96
	LOW	1400	0.95	0.93
	HIGH	1800	0.97	0.98
4TXCB048AC3+TUY120R9V5	NOMINAL	1600	0.97	0.97
	LOW	1400	0.95	0.94
	HIGH	1800	0.98	0.99
4TXCC037AS3+TDD100R9V5	NOMINAL	1600	0.95	0.97
	LOW	1400	0.94	0.94
	HIGH	1800	0.97	0.99
4TXCC037AS3+TDD1C100A9H5	NOMINAL	1600	0.95	0.92
	LOW	1400	0.94	0.90
	HIGH	1800	0.96	0.94
4TXCC037AS3+TDX1C100A9H4	NOMINAL	1600	0.96	0.97
	LOW	1400	0.95	0.95
	HIGH	1800	0.97	0.99
4TXCC037AS3+TDY100R9V4	NOMINAL	1600	0.96	0.98
	LOW	1400	0.95	0.96
	HIGH	1800	0.97	1.00
4TXCC037AS3+TUD1C100A9H5	NOMINAL	1600	0.95	0.94
	LOW	1400	0.94	0.91
	HIGH	1800	0.96	0.96
4TXCC037AS3+TUX1C100A9H4	NOMINAL	1600	0.95	0.93
	LOW	1400	0.94	0.90
	HIGH	1800	0.96	0.95
4TXCC037AS3+TUY100R9V4	NOMINAL	1600	0.96	0.96
	LOW	1400	0.94	0.94
	HIGH	1800	0.97	0.98
4TXCC049AC3+TDD100R9V5	NOMINAL	1600	0.95	0.96
	LOW	1400	0.94	0.93
	HIGH	1800	0.97	0.98
4TXCC049AC3+TDD120R9V5	NOMINAL	1600	0.95	0.95
	LOW	1400	0.94	0.92
	HIGH	1800	0.96	0.97
4TXCC049AC3+TDD1C100A9H5	NOMINAL	1600	0.96	0.94
	LOW	1400	0.95	0.92
	HIGH	1800	0.97	0.97
4TXCC049AC3+TDD1D120A9H5	NOMINAL	1600	0.96	0.94
	LOW	1400	0.94	0.92
	HIGH	1800	0.97	0.97
4TXCC049AC3+TDX1C100A9H4	NOMINAL	1600	0.96	0.96
	LOW	1400	0.95	0.94
	HIGH	1800	0.97	0.98
4TXCC049AC3+TDX1D120A9H5	NOMINAL	1600	0.96	0.96
	LOW	1400	0.94	0.93
	HIGH	1800	0.97	0.98
4TXCC049AC3+TDY120R9V5	NOMINAL	1600	0.97	0.96
	LOW	1400	0.95	0.94
	HIGH	1800	0.98	0.98
4TXCC049AC3+TUD080R9V4	NOMINAL	1600	0.96	0.96
	LOW	1400	0.95	0.94
	HIGH	1800	0.97	0.98
4TXCC049AC3+TUD100R9V5	NOMINAL	1600	0.96	0.97
	LOW	1400	0.95	0.95
	HIGH	1800	0.97	0.99
4TXCC049AC3+TUD120R9V5	NOMINAL	1600	0.95	0.95
	LOW	1400	0.94	0.93
	HIGH	1800	0.96	0.98
4TXCC049AC3+TUD140R9V5	NOMINAL	1600	0.96	0.95
	LOW	1400	0.95	0.93
	HIGH	1800	0.97	0.98

Performance Data
Heating

4TWB3048A1

CORRECTION FACTORS FOR OTHER COMBINATIONS (MULTIPLY DATA BY FACTOR)

INDOOR MODEL		CFM	MBTUH TOT	SYST KW
4TXCC049AC3+TUD1C080A9H4	NOMINAL	1600	0.96	0.94
	LOW	1400	0.94	0.92
	HIGH	1800	0.97	0.96
4TXCC049AC3+TUD1C100A9H5	NOMINAL	1600	0.96	0.94
	LOW	1400	0.95	0.92
	HIGH	1800	0.97	0.97
4TXCC049AC3+TUD1D120A9H5	NOMINAL	1600	0.95	0.92
	LOW	1400	0.94	0.89
	HIGH	1800	0.96	0.94
4TXCC049AC3+TUD1D140A9H5	NOMINAL	1600	0.96	0.94
	LOW	1400	0.94	0.92
	HIGH	1800	0.97	0.97
4TXCC049AC3+TUX1C100A9H4	NOMINAL	1600	0.95	0.95
	LOW	1400	0.94	0.93
	HIGH	1800	0.97	0.97
4TXCC049AC3+TUX1D120A9H5	NOMINAL	1600	0.96	0.94
	LOW	1400	0.95	0.91
	HIGH	1800	0.97	0.96
4TXCC049AC3+TUY100R9V4	NOMINAL	1600	0.97	0.96
	LOW	1400	0.95	0.94
	HIGH	1800	0.98	0.99
4TXCC049AC3+TUY120R9V5	NOMINAL	1600	0.96	0.95
	LOW	1400	0.94	0.92
	HIGH	1800	0.97	0.97
4TXCC054AS3+TDD100R9V5	NOMINAL	1600	0.94	0.96
	LOW	1400	0.93	0.94
	HIGH	1800	0.95	0.99
4TXCC054AS3+TDD1C100A9H5	NOMINAL	1600	0.94	0.94
	LOW	1400	0.93	0.92
	HIGH	1800	0.95	0.97
4TXCC054AS3+TDX1C100A9H4	NOMINAL	1600	0.94	0.96
	LOW	1400	0.92	0.93
	HIGH	1800	0.95	0.98
4TXCC054AS3+TUD1C100A9H5	NOMINAL	1600	0.94	0.94
	LOW	1400	0.92	0.91
	HIGH	1800	0.95	0.96
4TXCC054AS3+TUX1C100A9H4	NOMINAL	1600	0.93	0.95
	LOW	1400	0.92	0.92
	HIGH	1800	0.94	0.97
4TXCC054AS3+TUY100R9V4	NOMINAL	1600	0.94	0.96
	LOW	1400	0.93	0.94
	HIGH	1800	0.95	0.98
4TXCD050AC3+TDD100R9V5	NOMINAL	1600	0.95	0.96
	LOW	1400	0.94	0.93
	HIGH	1800	0.97	0.98
4TXCD050AC3+TDD120R9V5	NOMINAL	1600	0.95	0.94
	LOW	1400	0.94	0.92
	HIGH	1800	0.96	0.96
4TXCD050AC3+TDD1C100A9H5	NOMINAL	1600	0.96	0.94
	LOW	1400	0.94	0.92
	HIGH	1800	0.97	0.96
4TXCD050AC3+TDD1D120A9H5	NOMINAL	1600	0.95	0.94
	LOW	1400	0.94	0.92
	HIGH	1800	0.97	0.96
4TXCD050AC3+TDX1C100A9H4	NOMINAL	1600	0.96	0.96
	LOW	1400	0.94	0.93
	HIGH	1800	0.97	0.98
4TXCD050AC3+TDX1D120A9H5	NOMINAL	1600	0.95	0.95
	LOW	1400	0.94	0.93
	HIGH	1800	0.96	0.98
4TXCD050AC3+TDY100R9V4	NOMINAL	1600	0.96	0.97
	LOW	1400	0.95	0.94
	HIGH	1800	0.97	0.99

CORRECTION FACTORS FOR OTHER COMBINATIONS (MULTIPLY DATA BY FACTOR)

INDOOR MODEL		CFM	MBTUH TOT	SYST KW
4TXCD050AC3+TDY120R9V5	NOMINAL	1600	0.96	0.95
	LOW	1400	0.94	0.92
	HIGH	1800	0.97	0.97
4TXCD050AC3+TUD080R9V4	NOMINAL	1600	0.96	0.95
	LOW	1400	0.95	0.93
	HIGH	1800	0.97	0.98
4TXCD050AC3+TUD100R9V5	NOMINAL	1600	0.96	0.96
	LOW	1400	0.95	0.94
	HIGH	1800	0.97	0.99
4TXCD050AC3+TUD120R9V5	NOMINAL	1600	0.95	0.95
	LOW	1400	0.94	0.92
	HIGH	1800	0.96	0.97
4TXCD050AC3+TUD140R9V5	NOMINAL	1600	0.96	0.95
	LOW	1400	0.95	0.93
	HIGH	1800	0.97	0.97
4TXCD050AC3+TUD1C080A9H4	NOMINAL	1600	0.95	0.94
	LOW	1400	0.94	0.91
	HIGH	1800	0.96	0.96
4TXCD050AC3+TUD1C100A9H5	NOMINAL	1600	0.96	0.94
	LOW	1400	0.94	0.91
	HIGH	1800	0.97	0.96
4TXCD050AC3+TUD1D120A9H5	NOMINAL	1600	0.95	0.91
	LOW	1400	0.94	0.89
	HIGH	1800	0.96	0.94
4TXCD050AC3+TUD1D140A9H5	NOMINAL	1600	0.95	0.92
	LOW	1400	0.94	0.90
	HIGH	1800	0.96	0.94
4TXCD050AC3+TUX1C100A9H4	NOMINAL	1600	0.95	0.95
	LOW	1400	0.94	0.92
	HIGH	1800	0.96	0.97
4TXCD050AC3+TUX1D120A9H5	NOMINAL	1600	0.96	0.93
	LOW	1400	0.94	0.91
	HIGH	1800	0.97	0.96
4TXCD050AC3+TUY100R9V4	NOMINAL	1600	0.96	0.95
	LOW	1400	0.94	0.93
	HIGH	1800	0.97	0.97
4TXCD050AC3+TUY120R9V5	NOMINAL	1600	0.96	0.94
	LOW	1400	0.94	0.92
	HIGH	1800	0.97	0.97
4TXCD065AS3	NOMINAL	1600	0.97	0.99
	LOW	1400	0.96	0.96
	HIGH	1800	0.98	1.01
4TXCD065AS3+TUD120R9V5	NOMINAL	1600	0.95	0.95
	LOW	1400	0.94	0.93
	HIGH	1800	0.96	0.97
4TXCD065AS3+TUD140R9V5	NOMINAL	1600	0.96	0.95
	LOW	1400	0.95	0.93
	HIGH	1800	0.97	0.98
4TXCD065AS3+TUD1D140A9H5	NOMINAL	1600	0.95	0.94
	LOW	1400	0.94	0.92
	HIGH	1800	0.96	0.97
4TXCD065AS3+TUX1D120A9H5	NOMINAL	1600	0.95	0.94
	LOW	1400	0.94	0.92
	HIGH	1800	0.96	0.96
4TXCD065AS3+TUY120R9V5	NOMINAL	1600	0.96	0.95
	LOW	1400	0.94	0.92
	HIGH	1800	0.97	0.97
4TXFH054AS3	NOMINAL	1600	0.99	0.99
	LOW	1400	0.98	0.96
	HIGH	1800	1.00	1.01
4TXFH054AS3+TDD100R9V5	NOMINAL	1600	0.99	0.97
	LOW	1400	0.97	0.95
	HIGH	1800	1.00	1.00

Performance Data
Heating

4TWB3048A1

CORRECTION FACTORS FOR OTHER COMBINATIONS (MULTIPLY DATA BY FACTOR)

INDOOR MODEL		CFM	MBTUH TOT	SYST KW
4TXFH054AS3+TDD120R9V5	NOMINAL	1600	0.99	0.96
	LOW	1400	0.97	0.94
	HIGH	1800	1.00	0.99
4TXFH054AS3+TDD1C100A9H5	NOMINAL	1600	0.98	0.95
	LOW	1400	0.97	0.93
	HIGH	1800	0.99	0.97
4TXFH054AS3+TDD1D120A9H5	NOMINAL	1600	0.98	0.95
	LOW	1400	0.97	0.92
	HIGH	1800	0.99	0.97
4TXFH054AS3+TDX1C100A9H4	NOMINAL	1600	0.99	0.97
	LOW	1400	0.98	0.95
	HIGH	1800	1.00	1.00
4TXFH054AS3+TDX1D120A9H5	NOMINAL	1600	0.99	0.97
	LOW	1400	0.98	0.95
	HIGH	1800	1.00	1.00
4TXFH054AS3+TDY100R9V4	NOMINAL	1600	1.00	0.99
	LOW	1400	0.98	0.96
	HIGH	1800	1.01	1.01
4TXFH054AS3+TDY120R9V5	NOMINAL	1600	0.99	0.96
	LOW	1400	0.98	0.94
	HIGH	1800	1.00	0.99
4TXFH054AS3+TUD080R9V4	NOMINAL	1600	0.99	0.98
	LOW	1400	0.98	0.95
	HIGH	1800	1.00	1.00
4TXFH054AS3+TUD100R9V5	NOMINAL	1600	0.99	0.99
	LOW	1400	0.98	0.96
	HIGH	1800	1.00	1.01
4TXFH054AS3+TUD120R9V5	NOMINAL	1600	0.99	0.97
	LOW	1400	0.97	0.94
	HIGH	1800	1.00	0.99
4TXFH054AS3+TUD140R9V5	NOMINAL	1600	0.99	0.97
	LOW	1400	0.98	0.94
	HIGH	1800	1.00	0.99
4TXFH054AS3+TUD1C080A9H4	NOMINAL	1600	0.98	0.94
	LOW	1400	0.96	0.92
	HIGH	1800	0.99	0.97
4TXFH054AS3+TUD1C100A9H5	NOMINAL	1600	0.99	0.98
	LOW	1400	0.98	0.96
	HIGH	1800	1.00	1.00
4TXFH054AS3+TUD1D120A9H5	NOMINAL	1600	0.98	0.94
	LOW	1400	0.96	0.92
	HIGH	1800	0.99	0.96
4TXFH054AS3+TUD1D140A9H5	NOMINAL	1600	0.98	0.95
	LOW	1400	0.97	0.92
	HIGH	1800	0.99	0.97
4TXFH054AS3+TUX1C100A9H4	NOMINAL	1600	0.99	0.97
	LOW	1400	0.98	0.94
	HIGH	1800	1.00	0.99
4TXFH054AS3+TUX1D120A9H5	NOMINAL	1600	0.98	0.96
	LOW	1400	0.97	0.93
	HIGH	1800	1.00	0.98
4TXFH054AS3+TUY100R9V4	NOMINAL	1600	0.99	0.97
	LOW	1400	0.98	0.94
	HIGH	1800	1.00	0.99
4TXFH054AS3+TUY120R9V5	NOMINAL	1600	0.99	0.96
	LOW	1400	0.98	0.93
	HIGH	1800	1.00	0.98
RXA061S3	NOMINAL	1600	0.98	0.98
	LOW	1400	0.97	0.96
	HIGH	1800	0.99	1.01
RXC037S3+TDD100R9V5	NOMINAL	1600	0.98	0.97
	LOW	1400	0.96	0.94
	HIGH	1800	0.99	0.99

CORRECTION FACTORS FOR OTHER COMBINATIONS (MULTIPLY DATA BY FACTOR)

INDOOR MODEL		CFM	MBTUH TOT	SYST KW
RXC037S3+TDD1C100A9H5	NOMINAL	1600	0.97	0.92
	LOW	1400	0.96	0.90
	HIGH	1800	0.98	0.95
RXC037S3+TDX1C100A9H4	NOMINAL	1600	0.98	0.97
	LOW	1400	0.97	0.94
	HIGH	1800	0.99	0.99
RXC037S3+TDY100R9V4	NOMINAL	1600	0.99	0.98
	LOW	1400	0.97	0.96
	HIGH	1800	1.00	1.01
RXC037S3+TUD1C100A9H5	NOMINAL	1600	0.98	0.95
	LOW	1400	0.97	0.93
	HIGH	1800	0.99	0.97
RXC037S3+TUX1C100A9H4	NOMINAL	1600	0.97	0.93
	LOW	1400	0.96	0.91
	HIGH	1800	0.98	0.95
RXC037S3+TUY100R9V4	NOMINAL	1600	0.99	0.97
	LOW	1400	0.98	0.95
	HIGH	1800	1.00	1.00
RXC054S3+TDD100R9V5	NOMINAL	1600	0.97	0.96
	LOW	1400	0.95	0.94
	HIGH	1800	0.98	0.99
RXC054S3+TDD1C100A9H5	NOMINAL	1600	0.96	0.94
	LOW	1400	0.95	0.92
	HIGH	1800	0.97	0.97
RXC054S3+TDX1C100A9H4	NOMINAL	1600	0.97	0.97
	LOW	1400	0.96	0.94
	HIGH	1800	0.98	0.99
RXC054S3+TDY100R9V4	NOMINAL	1600	0.97	0.98
	LOW	1400	0.96	0.95
	HIGH	1800	0.99	1.00
RXC054S3+TUD100R9V5	NOMINAL	1600	0.97	0.98
	LOW	1400	0.96	0.95
	HIGH	1800	0.98	1.00
RXC054S3+TUD1C100A9H5	NOMINAL	1600	0.96	0.94
	LOW	1400	0.95	0.91
	HIGH	1800	0.97	0.96
RXC054S3+TUX1C100A9H4	NOMINAL	1600	0.97	0.96
	LOW	1400	0.95	0.93
	HIGH	1800	0.98	0.98
RXC054S3+TUY100R9V4	NOMINAL	1600	0.97	0.96
	LOW	1400	0.95	0.94
	HIGH	1800	0.98	0.98
RXC061S3	NOMINAL	1600	0.98	0.98
	LOW	1400	0.97	0.96
	HIGH	1800	0.99	1.01
TXH041A4+4AYTXVH-3+TDD100R9V5	NOMINAL	1600	0.97	0.96
	LOW	1400	0.95	0.94
	HIGH	1800	0.98	0.99
TXH041A4+4AYTXVH-3+TDD120R9V5	NOMINAL	1600	0.95	0.94
	LOW	1400	0.94	0.92
	HIGH	1800	0.96	0.96
TXH041A4+4AYTXVH-3+TDD1C100A9H5	NOMINAL	1600	0.96	0.92
	LOW	1400	0.94	0.89
	HIGH	1800	0.97	0.94
TXH041A4+4AYTXVH-3+TDD1D120A9H5	NOMINAL	1600	0.96	0.92
	LOW	1400	0.94	0.89
	HIGH	1800	0.97	0.94
TXH041A4+4AYTXVH-3+TDX1C100A9H4	NOMINAL	1600	0.97	0.96
	LOW	1400	0.95	0.94
	HIGH	1800	0.98	0.99
TXH041A4+4AYTXVH-3+TDX1D120A9H5	NOMINAL	1600	0.95	0.93
	LOW	1400	0.94	0.91
	HIGH	1800	0.96	0.95

Performance Data
Heating

4TWB3048A1

CORRECTION FACTORS FOR OTHER COMBINATIONS (MULTIPLY DATA BY FACTOR)

INDOOR MODEL		CFM	MBTUH TOT	SYST KW
TXH041A4+4AYTXVH-3+TDY100R9V4	NOMINAL	1600	0.96	0.96
	LOW	1400	0.95	0.94
	HIGH	1800	0.97	0.99
TXH041A4+4AYTXVH-3+TDY120R9V5	NOMINAL	1600	0.97	0.96
	LOW	1400	0.95	0.93
	HIGH	1800	0.98	0.98
TXH041A4+4AYTXVH-3+TUD100R9V5	NOMINAL	1600	0.96	0.96
	LOW	1400	0.95	0.94
	HIGH	1800	0.97	0.99
TXH041A4+4AYTXVH-3+TUD120R9V5	NOMINAL	1600	0.95	0.95
	LOW	1400	0.94	0.92
	HIGH	1800	0.96	0.97
TXH041A4+4AYTXVH-3+TUD140R9V5	NOMINAL	1600	0.96	0.95
	LOW	1400	0.95	0.92
	HIGH	1800	0.97	0.97
TXH041A4+4AYTXVH-3+TUD1C100A9H5	NOMINAL	1600	0.96	0.93
	LOW	1400	0.94	0.91
	HIGH	1800	0.97	0.96
TXH041A4+4AYTXVH-3+TUD1D120A9H5	NOMINAL	1600	0.95	0.91
	LOW	1400	0.94	0.89
	HIGH	1800	0.96	0.94
TXH041A4+4AYTXVH-3+TUD1D140A9H5	NOMINAL	1600	0.95	0.92
	LOW	1400	0.94	0.90
	HIGH	1800	0.96	0.94
TXH041A4+4AYTXVH-3+TUX1C100A9H4	NOMINAL	1600	0.96	0.92
	LOW	1400	0.94	0.90
	HIGH	1800	0.97	0.95
TXH041A4+4AYTXVH-3+TUX1D120A9H5	NOMINAL	1600	0.96	0.93
	LOW	1400	0.94	0.91
	HIGH	1800	0.97	0.95
TXH041A4+4AYTXVH-3+TUY100R9V4	NOMINAL	1600	0.97	0.96
	LOW	1400	0.96	0.94
	HIGH	1800	0.98	0.98
TXH041A4+4AYTXVH-3+TUY120R9V5	NOMINAL	1600	0.96	0.94
	LOW	1400	0.94	0.92
	HIGH	1800	0.97	0.96
TXH054A4+4AYTXVH-3	NOMINAL	1600	0.99	0.99
	LOW	1400	0.98	0.96
	HIGH	1800	1.00	1.01
TXH054A4+4AYTXVH-3+TDD100R9V5	NOMINAL	1600	0.99	0.97
	LOW	1400	0.97	0.95
	HIGH	1800	1.00	1.00
TXH054A4+4AYTXVH-3+TDD120R9V5	NOMINAL	1600	0.99	0.96
	LOW	1400	0.97	0.94
	HIGH	1800	1.00	0.99

CORRECTION FACTORS FOR OTHER COMBINATIONS (MULTIPLY DATA BY FACTOR)

INDOOR MODEL		CFM	MBTUH TOT	SYST KW
TXH054A4+4AYTXVH-3+TDD1D120A9H5	NOMINAL	1600	0.98	0.95
	LOW	1400	0.97	0.92
	HIGH	1800	0.99	0.97
TXH054A4+4AYTXVH-3+TDX1C100A9H4	NOMINAL	1600	0.99	0.97
	LOW	1400	0.98	0.95
	HIGH	1800	1.00	1.00
TXH054A4+4AYTXVH-3+TDX1D120A9H5	NOMINAL	1600	0.99	0.97
	LOW	1400	0.98	0.95
	HIGH	1800	1.00	1.00
TXH054A4+4AYTXVH-3+TDY100R9V4	NOMINAL	1600	1.00	0.99
	LOW	1400	0.98	0.96
	HIGH	1800	1.01	1.01
TXH054A4+4AYTXVH-3+TDY120R9V5	NOMINAL	1600	0.99	0.96
	LOW	1400	0.98	0.94
	HIGH	1800	1.00	0.99
TXH054A4+4AYTXVH-3+TUD100R9V5	NOMINAL	1600	0.99	0.99
	LOW	1400	0.98	0.96
	HIGH	1800	1.00	1.01
TXH054A4+4AYTXVH-3+TUD120R9V5	NOMINAL	1600	0.99	0.97
	LOW	1400	0.97	0.94
	HIGH	1800	1.00	0.99
TXH054A4+4AYTXVH-3+TUD140R9V5	NOMINAL	1600	0.99	0.97
	LOW	1400	0.98	0.94
	HIGH	1800	1.00	0.99
TXH054A4+4AYTXVH-3+TUD1C100A9H5	NOMINAL	1600	0.99	0.98
	LOW	1400	0.98	0.96
	HIGH	1800	1.00	1.00
TXH054A4+4AYTXVH-3+TUD1D120A9H5	NOMINAL	1600	0.98	0.94
	LOW	1400	0.96	0.92
	HIGH	1800	0.99	0.96
TXH054A4+4AYTXVH-3+TUD1D140A9H5	NOMINAL	1600	0.98	0.95
	LOW	1400	0.97	0.92
	HIGH	1800	0.99	0.97
TXH054A4+4AYTXVH-3+TUX1C100A9H4	NOMINAL	1600	0.99	0.97
	LOW	1400	0.98	0.94
	HIGH	1800	1.00	0.99
TXH054A4+4AYTXVH-3+TUX1D120A9H5	NOMINAL	1600	0.98	0.96
	LOW	1400	0.97	0.93
	HIGH	1800	1.00	0.98
TXH054A4+4AYTXVH-3+TUY100R9V4	NOMINAL	1600	0.99	0.97
	LOW	1400	0.98	0.94
	HIGH	1800	1.00	0.99
TXH054A4+4AYTXVH-3+TUY120R9V5	NOMINAL	1600	0.99	0.96
	LOW	1400	0.98	0.93
	HIGH	1800	1.00	0.98

Performance Data
Heating

4TWB3060A1

4TWB3060A1 WITH 4TEC3F60A1 AT 1800 CFM

O.D. TEMP. F.	HEATING CAPACITY MBH AT INDOOR DRY BULB TEMP. 70	75	80	TOTAL POWER IN KILOWATTS AT INDOOR DRY BULB TEMP. 70	75	80
2	25.23	24.98	24.75	3.74	3.85	3.96
7	29.00	28.71	28.45	3.89	4.00	4.12
12	32.77	32.44	32.15	4.04	4.16	4.28
17	36.54	36.17	35.85	4.19	4.31	4.44
22	37.60	37.22	36.89	4.22	4.34	4.47
27	38.66	38.28	37.93	4.25	4.38	4.50
32	39.72	39.33	38.97	4.28	4.41	4.54
37	43.49	43.06	42.67	4.43	4.56	4.70
42	51.33	50.81	50.35	4.76	4.90	5.04
47	59.16	58.57	58.04	5.08	5.23	5.39
52	62.93	62.30	61.73	5.23	5.39	5.54
57	66.70	66.03	65.43	5.38	5.54	5.70
62	70.47	69.76	69.13	5.53	5.70	5.86
67	74.24	73.50	72.83	5.68	5.85	6.02
72	78.01	77.23	76.53	5.83	6.00	6.18

CORRECTION FACTORS FOR OTHER AIRFLOWS (MULTIPLY DATA BY FACTOR)

	AIRFLOW	TOTAL CAPACITY	SENSIBLE CAPACITY
LOW	1750	0.99	0.98
HIGH	2250	1.01	1.03

NOTE: ALL TABLES ABOVE ARE AT ARI RATING CONDITIONS RATED WITH 25 FEET OF REFRIGERANT LINES.

CORRECTION FACTORS FOR OTHER COMBINATIONS (MULTIPLY DATA BY FACTOR)

INDOOR MODEL		CFM	MBTUH TOT	SYST KW
2TEH3F60A1+4AYTXVH-3	NOMINAL	2000	1.01	1.00
	LOW	1750	0.99	0.97
	HIGH	2250	1.02	1.02

Electrical Data

SCHEMATIC DIAGRAMS

(SEE LEGEND)

4TWB3018A

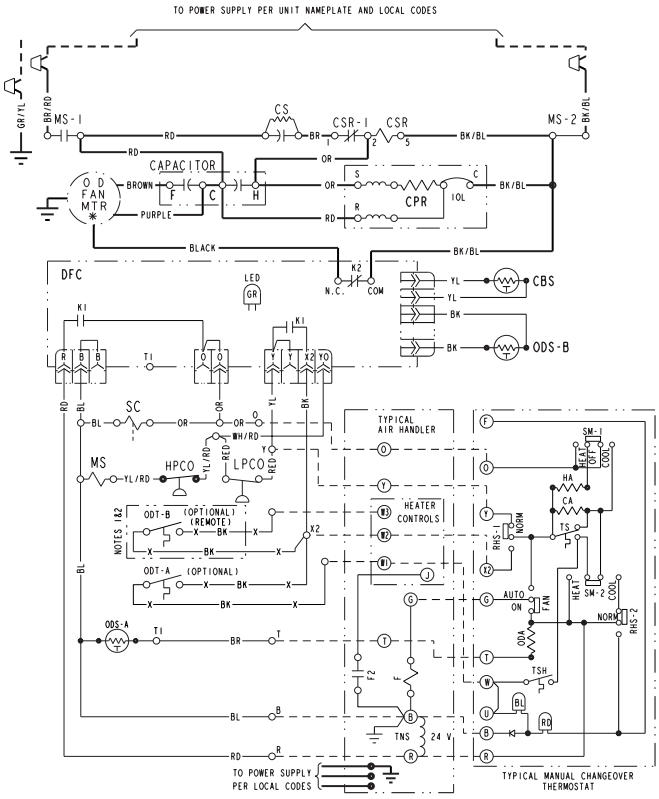

NOTES:

1. IF ODT-B IS NOT USED, ADD JUMPER BETWEEN W2 & W3 AT AIR HANDLER.
   IF USED, ODT-B MUST BE MOUNTED REMOTE OF CONTROL BOX IN AN APPROVED WEATHER PROOF ENCLOSURE.
2. IF ODT-A IS NOT USED, ADD JUMPER BETWEEN W1 & W2 AT AIR HANDLER.
3. LOW VOLTAGE (24 V.) FIELD WIRING MUST BE 18 AWG MIN.

⚠ WARNING	⚠ CAUTION
HAZARDOUS VOLTAGE!	USE COPPER CONDUCTORS ONLY!
DISCONNECT ALL ELECTRIC POWER INCLUDING REMOTE DISCONNECTS BEFORE SERVICING.	UNIT TERMINALS ARE NOT DESIGNED TO ACCEPT OTHER TYPES OF CONDUCTORS.
FAILURE TO DISCONNECT POWER BEFORE SERVICING CAN CAUSE SEVERE PERSONAL INJURY OR DEATH!	FAILURE TO DO SO MAY CAUSE DAMAGE TO THE EQUIPMENT!

FOR CANADIAN INSTALLATIONS
POUR INSTALLATIONS CANADIENNES

CAUTION: NOT SUITABLE FOR USE ON SYSTEMS EXCEEDING 150V-TO-GROUND.
ATTENTION: NE CONVIENT PAS AUX INSTALLATIONS DE PLUS DE 150 V A LA TERRE.

PRINTED FROM DI54805 P02

4TWB3024,030A

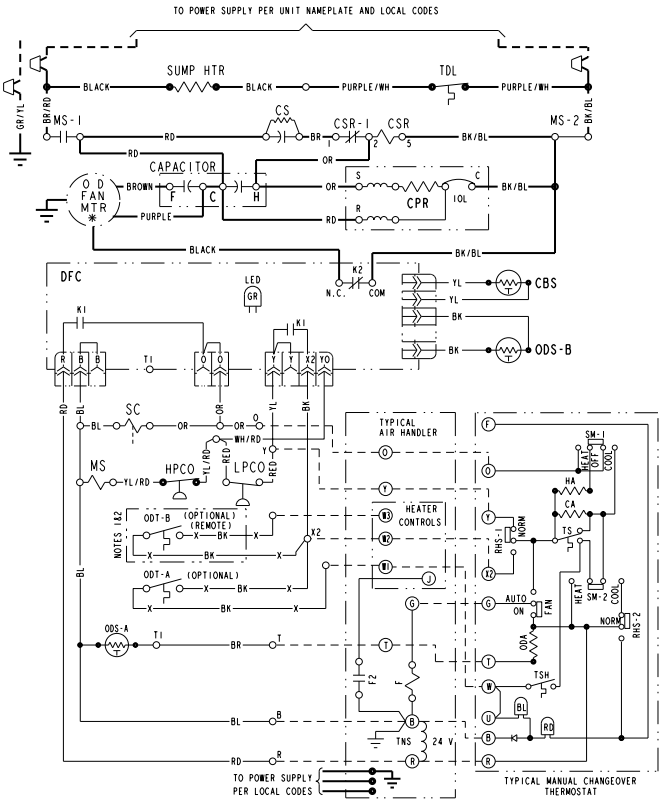

NOTES:

1. IF ODT-B IS NOT USED, ADD JUMPER BETWEEN W2 & W3 AT AIR HANDLER.
   IF USED, ODT-B MUST BE MOUNTED REMOTE OF CONTROL BOX IN AN APPROVED WEATHER PROOF ENCLOSURE.
2. IF ODT-A IS NOT USED, ADD JUMPER BETWEEN W1 & W2 AT AIR HANDLER.
3. LOW VOLTAGE (24 V.) FIELD WIRING MUST BE 18 AWG MIN.

⚠ WARNING	⚠ CAUTION
HAZARDOUS VOLTAGE!	USE COPPER CONDUCTORS ONLY!
DISCONNECT ALL ELECTRIC POWER INCLUDING REMOTE DISCONNECTS BEFORE SERVICING.	UNIT TERMINALS ARE NOT DESIGNED TO ACCEPT OTHER TYPES OF CONDUCTORS.
FAILURE TO DISCONNECT POWER BEFORE SERVICING CAN CAUSE SEVERE PERSONAL INJURY OR DEATH!	FAILURE TO DO SO MAY CAUSE DAMAGE TO THE EQUIPMENT!

FOR CANADIAN INSTALLATIONS
POUR INSTALLATIONS CANADIENNES

CAUTION: NOT SUITABLE FOR USE ON SYSTEMS EXCEEDING 150V-TO-GROUND.
ATTENTION: NE CONVIENT PAS AUX INSTALLATIONS DE PLUS DE 150 V A LA TERRE.

PRINTED FROM DI54641 P02

Electrical Data

SCHEMATIC DIAGRAMS

(SEE LEGEND)

4TWB3036,042A

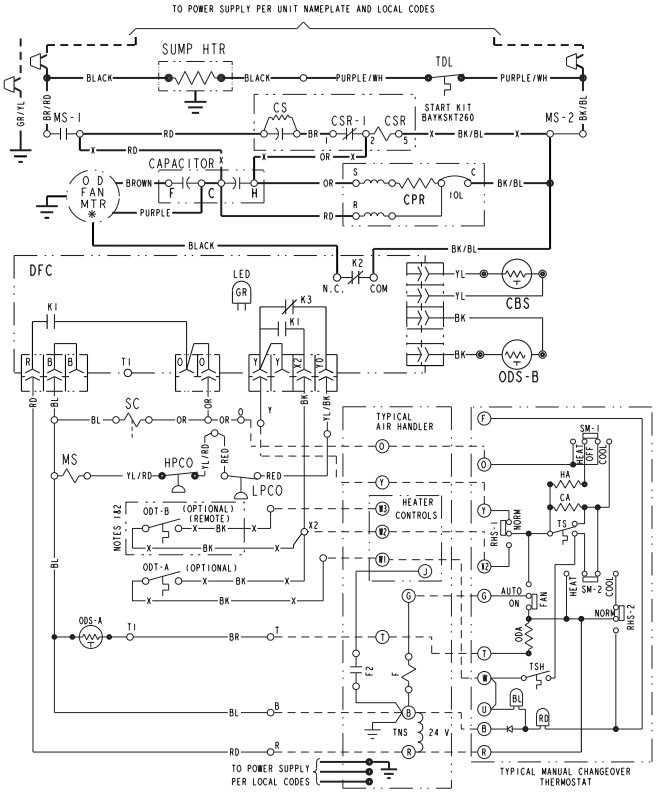

NOTES:

1. IF ODT-B IS NOT USED, ADD JUMPER BETWEEN W2 & W3 AT AIR HANDLER.
   IF USED, ODT-B MUST BE MOUNTED REMOTE OF CONTROL BOX IN AN APPROVED WEATHER PROOF ENCLOSURE.
2. IF ODT-A IS NOT USED, ADD JUMPER BETWEEN W1 & W2 AT AIR HANDLER.
3. LOW VOLTAGE (24 V.) FIELD WIRING MUST BE 18 AWG MIN.

⚠ WARNING	⚠ CAUTION
HAZARDOUS VOLTAGE! DISCONNECT ALL ELECTRIC POWER INCLUDING REMOTE DISCONNECTS BEFORE SERVICING. FAILURE TO DISCONNECT POWER BEFORE SERVICING CAN CAUSE SEVERE PERSONAL INJURY OR DEATH!	USE COPPER CONDUCTORS ONLY! UNIT TERMINALS ARE NOT DESIGNED TO ACCEPT OTHER TYPES OF CONDUCTORS. FAILURE TO DO SO MAY CAUSE DAMAGE TO THE EQUIPMENT!

FOR CANADIAN INSTALLATIONS
POUR INSTALLATIONS CANADIENNES

CAUTION: NOT SUITABLE FOR USE ON SYSTEMS EXCEEDING 150V-TO-GROUND.
ATTENTION: NE CONVIENT PAS AUX INSTALLATIONS DE PLUS DE 150 V A LA TERRE.

PRINTED FROM DI54717 P02

4TWB3048A

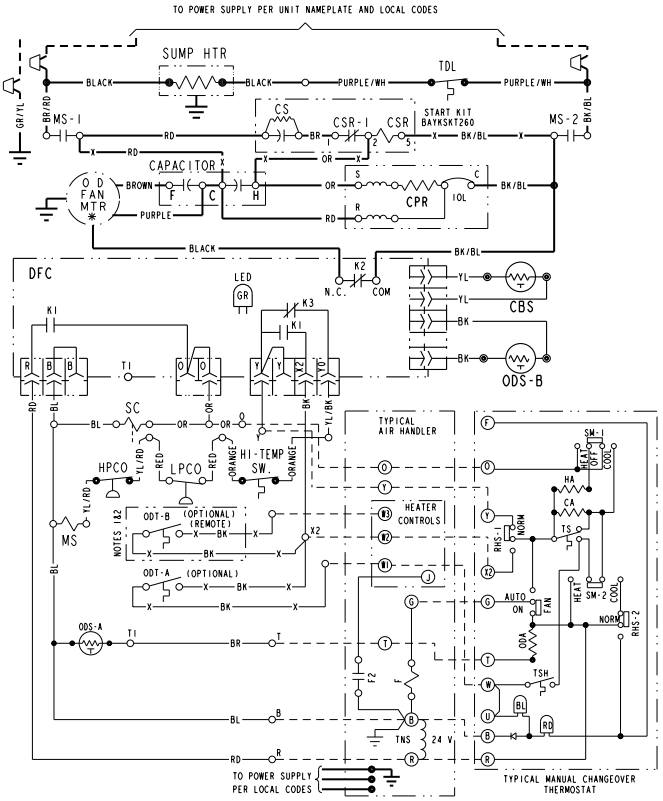

NOTES:

1. IF ODT-B IS NOT USED, ADD JUMPER BETWEEN W2 & W3 AT AIR HANDLER.
   IF USED, ODT-B MUST BE MOUNTED REMOTE OF CONTROL BOX IN AN APPROVED WEATHER PROOF ENCLOSURE.
2. IF ODT-A IS NOT USED, ADD JUMPER BETWEEN W1 & W2 AT AIR HANDLER.
3. LOW VOLTAGE (24 V.) FIELD WIRING MUST BE 18 AWG MIN.

⚠ WARNING	⚠ CAUTION
HAZARDOUS VOLTAGE! DISCONNECT ALL ELECTRIC POWER INCLUDING REMOTE DISCONNECTS BEFORE SERVICING. FAILURE TO DISCONNECT POWER BEFORE SERVICING CAN CAUSE SEVERE PERSONAL INJURY OR DEATH!	USE COPPER CONDUCTORS ONLY! UNIT TERMINALS ARE NOT DESIGNED TO ACCEPT OTHER TYPES OF CONDUCTORS. FAILURE TO DO SO MAY CAUSE DAMAGE TO THE EQUIPMENT!

FOR CANADIAN INSTALLATIONS
POUR INSTALLATIONS CANADIENNES

CAUTION: NOT SUITABLE FOR USE ON SYSTEMS EXCEEDING 150V-TO-GROUND.
ATTENTION: NE CONVIENT PAS AUX INSTALLATIONS DE PLUS DE 150 V A LA TERRE.

PRINTED FROM DI54745 P02

Electrical Data

SCHEMATIC DIAGRAMS

4TWB3060A

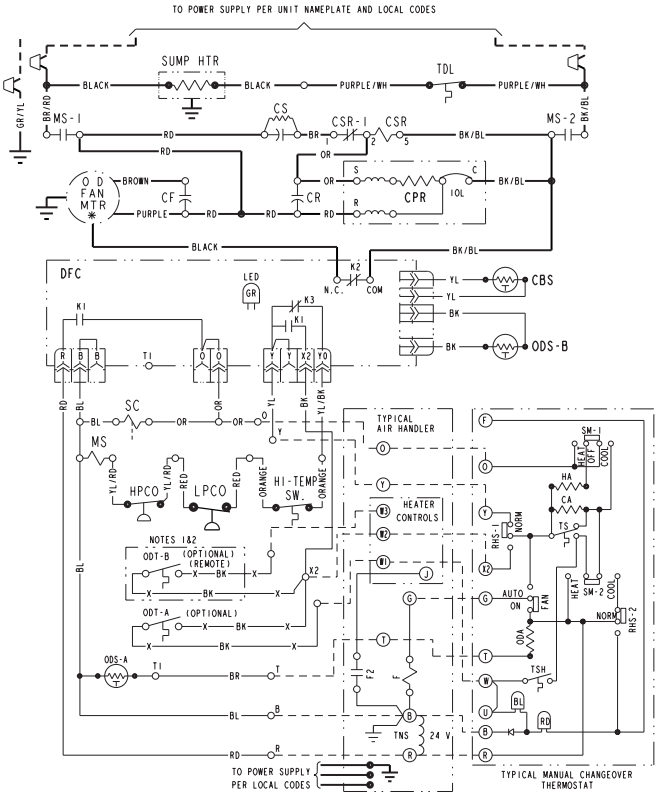

NOTES:

1. IF ODT-B IS NOT USED, ADD JUMPER BETWEEN W2 & W3 AT AIR HANDLER.
   IF USED, ODT-B MUST BE MOUNTED REMOTE OF CONTROL BOX IN AN APPROVED WEATHER PROOF ENCLOSURE.
2. IF ODT-A IS NOT USED, ADD JUMPER BETWEEN W1 & W2 AT AIR HANDLER.
3. LOW VOLTAGE (24 V.) FIELD WIRING MUST BE 18 AWG MIN.

⚠ WARNING	⚠ CAUTION
HAZARDOUS VOLTAGE! DISCONNECT ALL ELECTRIC POWER INCLUDING REMOTE DISCONNECTS BEFORE SERVICING. FAILURE TO DISCONNECT POWER BEFORE SERVICING CAN CAUSE SEVERE PERSONAL INJURY OR DEATH!	USE COPPER CONDUCTORS ONLY! UNIT TERMINALS ARE NOT DESIGNED TO ACCEPT OTHER TYPES OF CONDUCTORS. FAILURE TO DO SO MAY CAUSE DAMAGE TO THE EQUIPMENT!

FOR CANADIAN INSTALLATIONS
POUR INSTALLATIONS CANADIENNES

CAUTION: NOT SUITABLE FOR USE ON SYSTEMS EXCEEDING 150V-TO-GROUND.
ATTENTION: NE CONVIENT PAS AUX INSTALLATIONS DE PLUS DE 150 V A LA TERRE.

PRINTED FROM DI54746 P02

LEGEND

COLOR OF WIRE
BK/BL BLACK WIRE WITH BLUE MARKER
COLOR OF MARKER

BK	BLACK	OR	ORANGE	YL	YELLOW
BL	BLUE	RD	RED	GR	GREEN
BR	BROWN	WH	WHITE	PR	PURPLE

SYMBOLS

- 24 V. / LINE V. — FACTORY WIRING
- 24 V. / LINE V. — FIELD WIRING
- —X— FIELD INSTALLED FACTORY WIRING
- GROUND
- JUNCTION
- WIRE NUT OR CONNECTOR
- COIL
- CAPACITOR
- RELAY CONTACT (N.O.)
- RELAY CONTACT (N.C.)
- THERMISTOR
- INTERNAL OVERLOAD PROTECTOR
- PRESSURE ACTUATED SWITCH
- TEMP. ACTUATED SWITCH
- POL. PLUG FEMALE HOUSING (MALE TERM.)
- POL. PLUG MALE HOUSING (FEMALE TERM.)
- RESISTOR OR HEATING ELEMENT
- MOTOR WINDING
- TERMINAL

CA	COOLING ANTICIPATOR	LPCO	LOW PRESSURE CUTOUT SW.
CBS	COIL BOTTOM SENSOR	MS	COMPRESSOR MOTOR CONTACTOR
CF	FAN CAPACITOR	ODA	OUTDOOR ANTICIPATOR
CN	WIRE CONNECTOR	OFT	OUTDOOR FAN THERMOSTAT
CPR	COMPRESSOR	ODS	OUTDOOR TEMPERATURE SENSOR
CR	RUN CAPACITOR	ODT	OUTDOOR THERMOSTAT
CS	STARTING CAPACITOR	RHS	RESISTANCE HEAT SWITCH
CSR	CAPACITOR SWITCHING RELAY	SC	SWITCHOVER VALVE SOLENOID
DFC	DEFROST CONTROL	SM	SYSTEM "ON-OFF" SWITCH
F	INDOOR FAN RELAY	TDL	DISCHARGE LINE THERMOSTAT
HA	HEATING ANTICIPATOR	TNS	TRANSFORMER
HPCO	HIGH PRESSURE CUTOUT SW.	TS	HEATING-COOLING THERMOSTAT
IOL	INTERNAL OVERLOAD PROTECTOR	TSH	HEATING THERMOSTAT

Dimensions

4TWB3 OUTLINE DRAWING

NOTE: ALL DIMENSIONS ARE IN MM (INCHES)

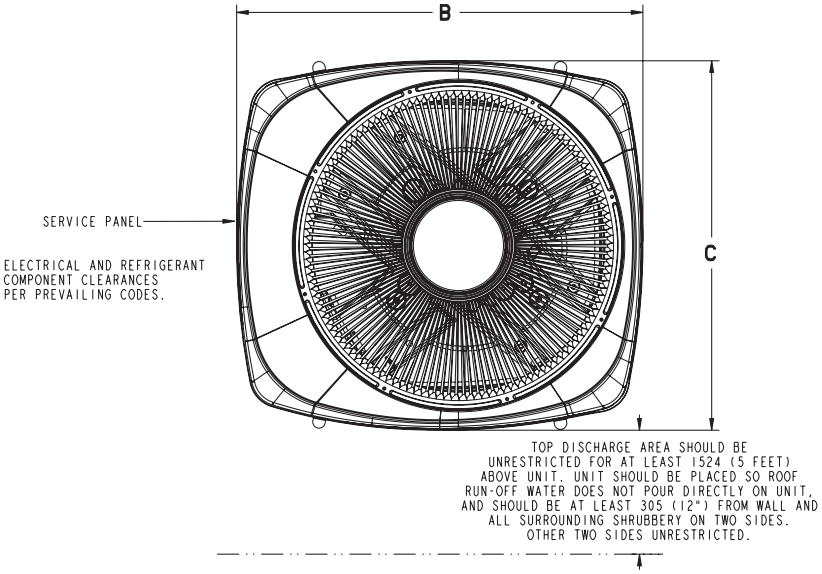

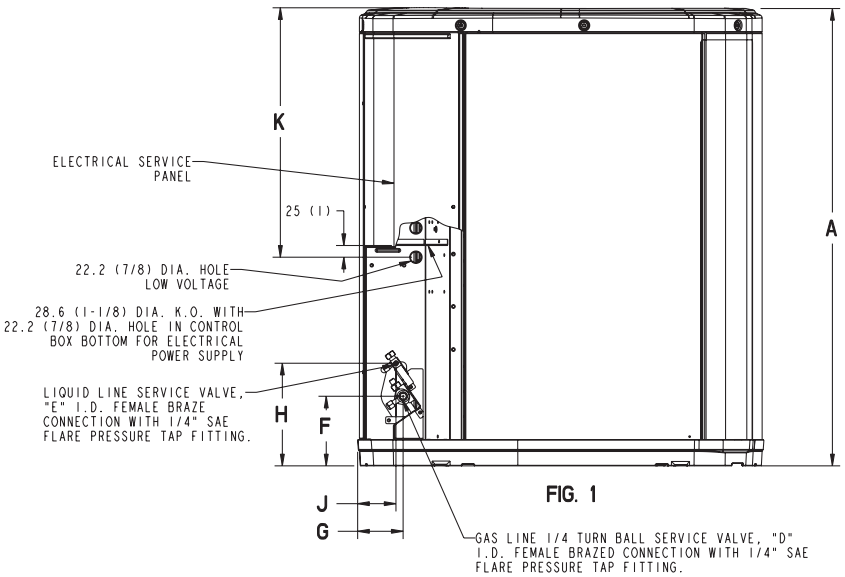

FIG. 1

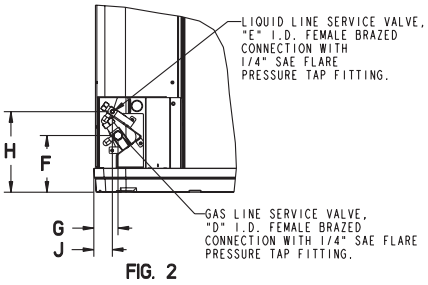

FIG. 2

MODELS	BASE	FIG.	A	B	C	D	E	F	G	H	J	K
4TWB3018A	3	2	730 (28-3/4)	829 (32-5/8)	756 (29-3/4)	1/2	1/4	127 (5)	76 (3)	197 (7-3/4)	57 (2-1/4)	508 (20)
4TWB3024A	3	2	730 (28-3/4)	829 (32-5/8)	756 (29-3/4)	5/8	5/16	127 (5)	76 (3)	197 (7-3/4)	57 (2-1/4)	508 (20)
4TWB3030A	3	1	933 (36-3/4)	829 (32-5/8)	756 (29-3/4)	3/4	5/16	143 (5-5/8)	92 (3-5/8)	210 (8-1/4)	79 (3-1/8)	508 (20)
4TWB3036A	4	1	943 (37-1/8)	946 (37-1/4)	870 (34-1/4)	3/4	3/8	152 (6)	98 (3-7/8)	219 (8-5/8)	86 (3-3/8)	508 (20)
4TWB3042A	4	1	943 (37-1/8)	946 (37-1/4)	870 (34-1/4)	3/4	3/8	152 (6)	98 (3-7/8)	219 (8-5/8)	86 (3-3/8)	508 (20)
4TWB3048A	4	1	1045 (41-1/8)	946 (37-1/4)	870 (34-1/4)	7/8	3/8	152 (6)	98 (3-7/8)	219 (8-5/8)	86 (3-3/8)	508 (20)
4TWB3060A	4	1	1045 (41-1/8)	946 (37-1/4)	870 (34-1/4)	7/8	3/8	152 (6)	98 (3-7/8)	219 (8-5/8)	86 (3-3/8)	508 (20)

From Dwg. 21D153074 Rev. 13

Mechanical Specification Options

General
The 4TWB3 is fully charged from the factory for up to 15 feet of piping. This unit is designed to operate at outdoor ambient temperatures as high as 115°F. Cooling capacities are matched with a wide selection of air handlers and furnace coils that are ARI certified. The unit is UL listed. Exterior is designed for outdoor application.

Casing
Unit casing is constructed of heavy gauge, G90 galvanized steel and painted with a weather-resistant powder paint on all louvers, panels, prepaint on all other panels. Corrosion and weatherproof CMBP-G30 DuraTuff™ base.

Refrigerant Controls
Refrigeration system controls include condenser fan, compressor contactor and high pressure switch. High and low pressure controls are inherent to the compressor. A factory installed liquid line drier is standard.

Compressor
The Climatuff® compressor features a 5 year limited warranty, internal over temperature and pressure protection and total dipped hermetic motor. Other features include: roto lock suction and discharge refrigerant connections, centrifugal oil pump and low vibration and noise.

Condenser Coil
The outdoor coil provides low airflow resistance and efficient heat transfer. The coil is protected on all four sides by louvered panels and has a 5 year limited warranty.

Low Ambient Cooling
As manufactured, this unit has a cooling capability to 55°F. The addition of an evaporator defrost control permits operation to 40°F. The addition of an evaporator defrost control with TXV permits low ambient cooling to 30°F.

Accessories
Thermostats — Cooling only and heat/cooling (manual and automatic change-over). Sub-base to match thermostat and locking thermostat cover.

Evaporator Defrost Control — See Low Ambient Cooling.

ARI Standard
210/240 UHP

Literature Order Number	SSP-PRC020-EN	P.I.
File Number	PL-UN-4TWB-SSP-PRC-EN 10/06	
Supersedes	New	
Stocking Location	Electronic Only	

Trane
A business of
American Standard Companies
www.trane.com

Trane *has a policy of continuous product and product data improvement* ***and*** *it reserves the right to change design and specifications without notice.*